Low Voltage
Catalogue | 2013

Source changeover systems

Compact NSX100-630, Compact NS630b-1600,
Compact INS/INV, Masterpact

Schneider Electric

Whatever the system, you benefit from our expertise!

> MTSE range

Compact INS
From 40 A to 630 A

> RTSE range

Compact NSX
From 100 A to 630 A

Masterpact NT / NW
From 630 A to 6300 A

> ATSE range

UA Controller

Compact NSX
From 100 A to 630 A

Our expertise and support come together with the source-changeover system you choose for your LV electrical installation.

With Compact INS, Compact NSX and Masterpact NT and NW, we offer a complete range of solutions, designed around key values:

Maximum continuity of service

> Energy availability is ensured whatever the external requirements (e.g. high power demand).

> Maintenance and replacement of the sources (N or R) can be done with no interruption of service.

You can maintain a continuous level of service and customer satisfaction.

Maximum safety

For LV electrical installations where safety and continuity of service are critical for people and/or equipment such as hospitals, airports, banks, malls, etc.

Optimized energy management

> Transfer the load to a replacement source according to external requirements.

> Manage power sources according to power quality and power costs.

> Perform system regulation.

> Switch to an emergency replacement source.

You are no longer dependent on your power supply (and supplier)!

Simplicity and reliability

> **Simple installation** on LV switchboard.

> **Optimized size** of the switchboard.

> System **based on pre-tested components.**

> Compliance with **IEC 60947-6-1.**

For critical applications
in particular
For all others
in general

A source-changeover system is indispensable for applications that need a continuous supply of electric power (hospitals, airports, banks, government facilities, etc.).

But a source-changeover system is also suitable for all LV electrical installations exposed to:

> Nominal voltage loss or dip (when there is high demand for electric power)

> Unpredictable power quality

> Frequent power cuts.

These factors, and many others, can damage the continuity of service of your electrical installation.

For infrastructure managers, a source-changeover system gives direct economic benefits: it is possible to select your source based on power cost.
In this case, the replacement source (R) is used as an alternative, more economical source.

Managing energy efficiently

Power Cost

Safety

General content

Presentation 2

Functions and characteristics A-1

Dimensions B-1

Electrical diagrams C-1

Catalogue numbers and order forms D-1

For maximum continuity of service...

Incoming feeders and main LV switchboards

PB105109.eps

Currents
From 630 to 6300 A.

Db101543.eps

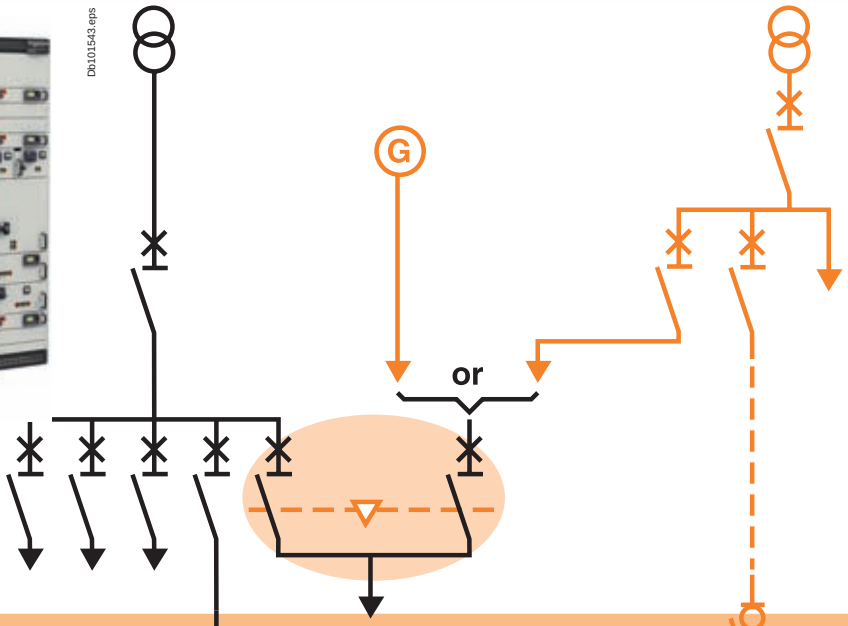

Power distribution

PD390385_SE_R_35.eps

Currents
From 250 to 3200 A.

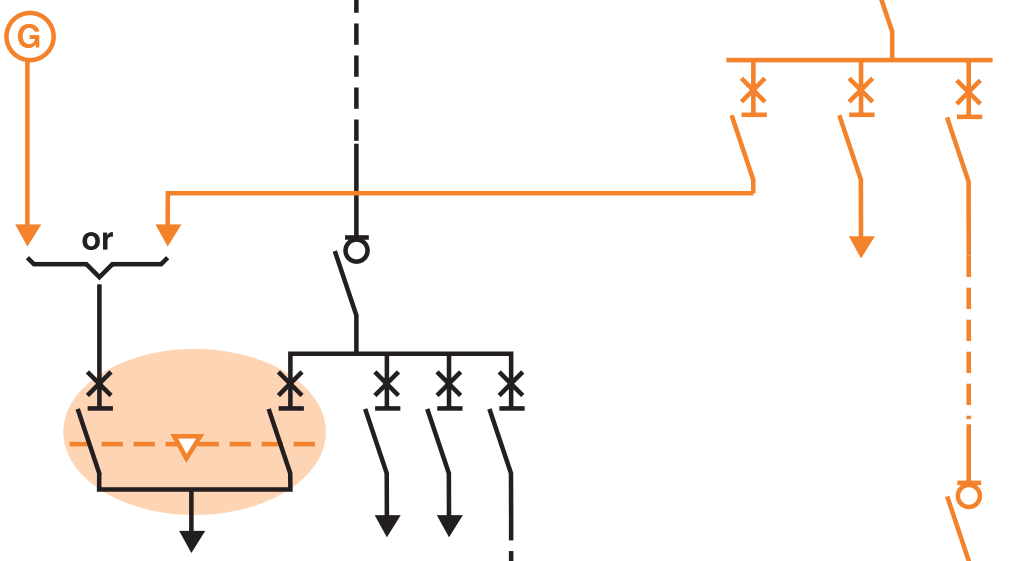

Loads

PB111556.eps

Currents
From 40 to 400 A.

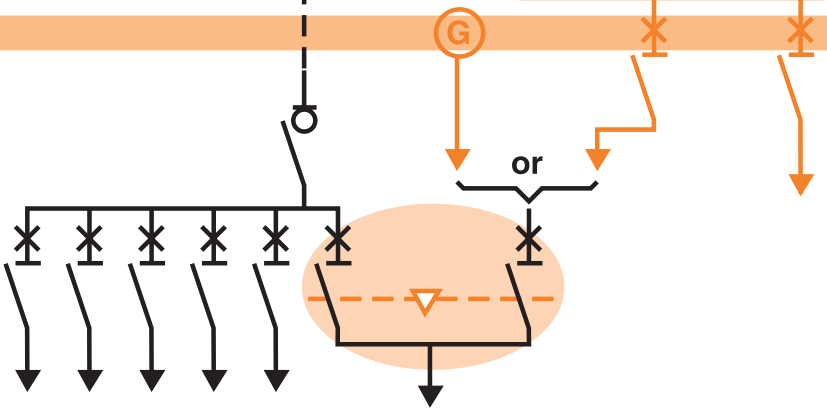

1 normal source
1 replacement source

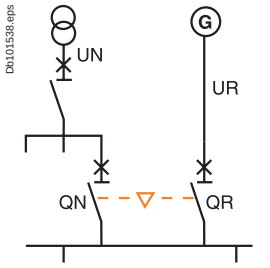

QN	QR
0	0
1	0
0	1

2 sources with coupler on busbars

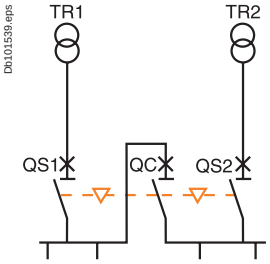

QS1	QC	QS2
0	0	0
1	0	1
1	1	0
0	1	1
1	0	0 (1)
0	0	1 (1)

(1) possible by forcing operation.

2 normal sources
1 replacement source

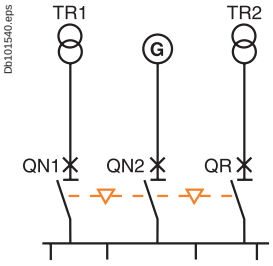

QN1	QN2	QR
0	0	0
1	1	0
0	0	1
1	0	0
0	1	0

Generator or permanent source

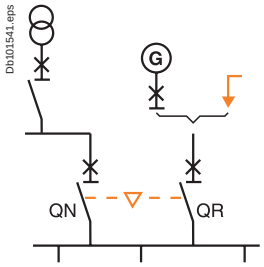

QN	QR
0	0
1	0
0	1

Typical applications:
- continuous production processes
- operating rooms
- computer rooms...

Generator or permanent source

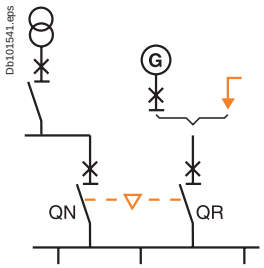

Generator or permanent source

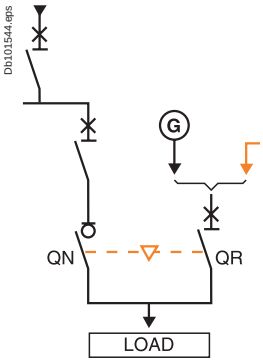

QN	QR
0	0
1	0
0	1

Typical applications:
- large electrical installations (e.g. airports)
- refrigeration units
- special electricity tariffs
- pumping stations...

Functions and characteristics

Presentation *2*

Overview of solutions

Manual source-changeover systems Compact INS/INV 40 to 630 A, Compact NSX100/630 A-2
Manual source-changeover systems Compact NS and Masterpact NT/NW 630 A to 6300 A A-3
Remote-operated source-changeover systems Compact NSX100/630, Compact NS630b/1600 A A-4
Remote-operated source-changeover systems Masterpact NT/NW 630 A to 6300 A A-5

Manual source-changeover systems

Possible combinations A-6

Remote-operated source-changeover systems

Mechanical interlocking Compact NSX, Compact NS or Masterpact NT/NW A-10
Mechanical interlocking Compact NS or Masterpact NT/NW A-11
General characteristics Compact NSX A-12
General characteristics Compact NS, Masterpact NT/NW A-13
Mech. and elect. durability A-14
Connection and insulation accessories for Compact NSX and INS ≤ 630 A A-15
Electrical interlocking A-16
Standard configurations A-17

Associated controllers

Controller selection A-18
Controller installation A-19
BA controller A-20
BA controller, Operating sequences A-21
UA controller A-22
UA controller, Operating sequences, Forced operation mode A-23
UA controller, Operating sequences, Special-tariff mode A-24
UA controller, Operating sequences , Test mode and automatic operation A-25

Operating sequences

IVE unit A-26
BA/UA controller A-27

COM communications option A-28

Dimensions *B-1*
Electrical diagrams *C-1*
Catalogue numbers and order forms *D-1*

Overview of solutions

Manual source-changeover systems
Compact INS/INV 40 to 630 A, Compact NSX100/630

Range	Compact		Compact
Models	INS40 to INS80 INS100 to INS160	INS250 to INS630 INV250 to INV630	NSX100 to NSX250 NSX400 to NSX630
Rating (A)	40 to 160	100 to 630	100 to 630
Type of device	Switch-disconnectors with extended handles	Switch-disconnectors	N/H/L circuit breakers NA switch-disconnectors
Manual source-changeover systems			
Interlocking via toggles			
DB126589.eps 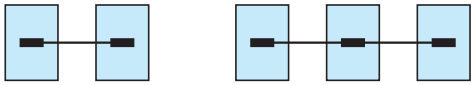 *2 devices side-by-side.* *3 devices side-by-side.*			Db101545.eps 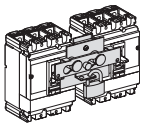
Interlocking via rotary handles			
DB126590.eps 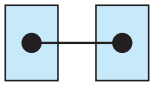 *2 devices side-by-side.*	Db101546.eps 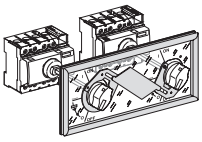	Db101547.eps 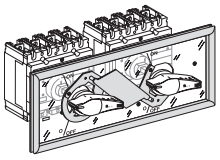	Db101548.eps 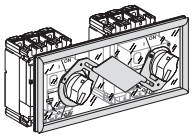
Interlocking via keylocks with captive keys			
DB126588.eps 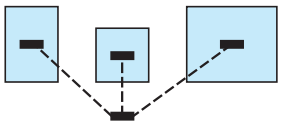 *A number of different devices.*		Db101549.eps 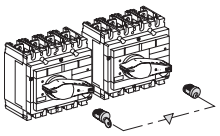	Db101550.eps 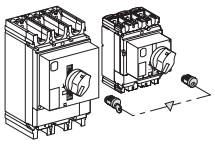
Interlocking on a base plate			
DB126587.eps 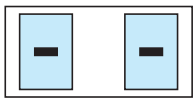 *2 devices side-by-side.*			Db101551.eps 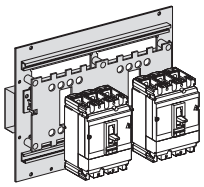
Complete source-changeover assemblies			
DB126586.eps *2 devices side-by-side.*		DB404170.eps 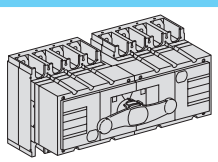	

Manual source-changeover systems
Compact NS and Masterpact NT/NW
630 A to 6300 A

Range	Compact	Masterpact	
Models	NS630b to NS1600	NT06 to NT16	NW08 to NW63
Rating (A)	630 to 1600	630 to 1600	800 to 6300
Type of device	N/H/L circuit breakers NA switch-disconnectors	H1/L1 circuit breakers HA switch-disconnectors	N1/H1/H2/H3/L1 circuit breakers NA/HA/HF switch-disconnectors

Manual source-changeover systems

Interlocking via extended rotary handles

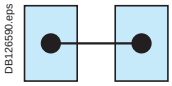

2 devices side-by-side.

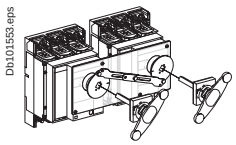

Interlocking via keylocks with captive keys

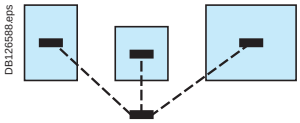

A number of different devices.

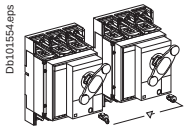

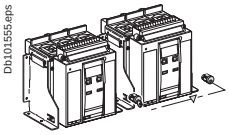

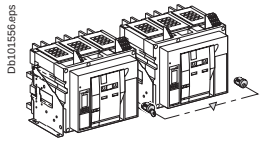

Mechanical interlocking using connecting rods

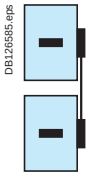

2 devices one above the other.

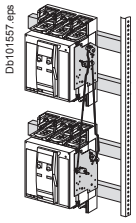

(1)

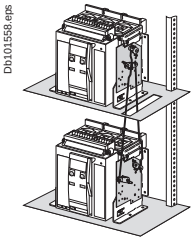

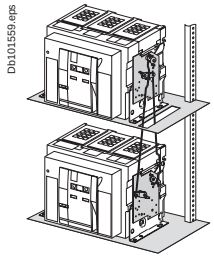

Mechanical interlocking using cables

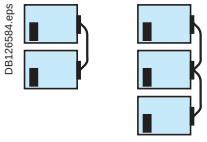

2 or 3 devices one above the other.

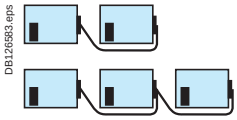

2 or 3 devices side-by-side.

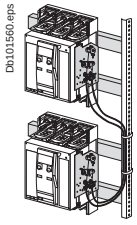

(1)
(2)

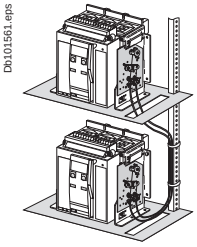

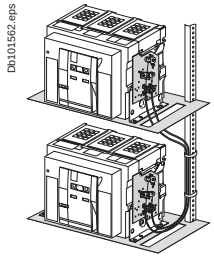

For this case and other cases, please consult us

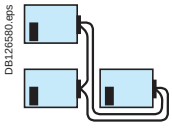

(1) Implemented with NS630b to NS1600 electrically-operated devices only.
(2) For source-changeover systems using cables, always respect the installation conditions specified on page A-13.

Overview of solutions

Remote-operated source-changeover systems Compact NSX100/630, Compact NS630b/1600 A

Range	Compact	
Models	NSX100 to NSX630	NS630b to NS1600
Rating (A)	100 to 630	630 to 1600
Type of device	N/H/L circuit breakers NA switch-disconnectors	N/H/L circuit breakers NA switch-disconnectors

Remote-operated source-changeover system

Mechanical interlocking on base plate + electrical interlocking

DB126587.eps

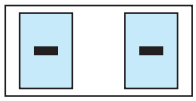

2 electrically-operated devices side-by-side combined with an electrical interlocking system.

Db101563.eps

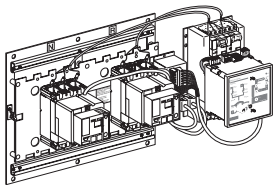

Mechanical interlocking using connecting rods + electrical interlocking

DB126585.eps

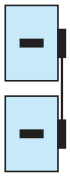

2 electrically-operated devices one above the other combined with an electrical interlocking system.

Db101557.eps

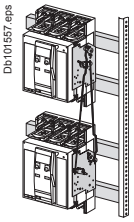

Mechanical interlocking using cables + electrical interlocking

DB126581.eps

2 electrically-operated devices one above the other combined with an electrical interlocking system.

DB126582.eps

2 electrically-operated devices side-by-side combined with an electrical interlocking system.

Db101560.eps

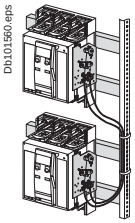

(1)

Automatic source-changeover systems

Remote-operated source-changeover system combined with an automatic-control system

DB126581.eps

DB126582.eps

The automatic controller operates the devices depending on external parameters.

***BA**: Simple controller that manages the changeover function.*

***UA**: Controller that also manages engine generator sets.*

***UA150**: UA controller with a communication option.*

DB404439.eps

BA controller

DB404440.eps

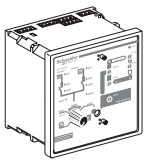

UA and UA150 controller

(1) For source-changeover systems using cables, always respect the installation conditions specified on page A-13.

Manual source-changeover systems
Possible combinations

A manual source-changeover system can be installed on two or three manually-operated and mechanically interlocked circuit breakers or switch-disconnectors. Interlocks prevent connection to both sources at the same time, even momentarily.

All possibilities for manual source-changeover systems

Type of device	Type of interlocking for two devices			
	Complete assembly	Keylock	Direct rotary handle	Extended rotary handle
Compact switch-disconnectors				
INS40 to INS160				■
INS250-100 to INS630	■	■	■ ▲	■ ▲
INV100 to 630		■	■ ▲	■ ▲▲
INS/INV630b to 2500		■		

Legend:
▲ *Possible but visible break function disabled.*
▲ *250 A and 630 A ratings can be mixed by using INS320/630 rotary handle interlocking system.*

Type of device	Type of interlocking for two devices					
	Toggle	Keylock	Direct rotary handle	Extended rotary handle	On base plate (toggle or direct extended rotary control)	On base plate (motor mechanism)
Compact fixed or withdrawable circuit breakers						
NSX100 to 250	■ ■	■ ■ ●	■ ■	■ ■	■ ■ ■	■ ■ ■
NSX400 to NS630	■ ■	■ ■ ●	■ ■	■ ■	■ ■ ■	■ ■ ■
NSX100 to 630		■ ■ ●	■ ■ ●	■ ■ ●	■ ■ ■ ●	■ ■ ■ ●
NS630b to 1600 with rotary handle		■ ■ ●	■ ■	■ ■		

Legend:
■ *Fixed devices only.*
■ *Fixed or withdrawable devices.*
■ *Devices must be either both fixed or both withdrawable.*
● *With NSX400/630 rotary handle interlocking system.*
● *Possible with NSX400/630 base plate + NSX100-250 adaptation kit.*
● *Devices equipped with rotary handles.*

Type of device	Type of interlocking for either all fixed or all withdrawable devices					
	Keylock	Cable-type, 2 devices side-by-side	Cable-type, 3 devices side-by-side	Cable-type, 2 devices one above the other	Cable-type, 3 devices one above another	Rod-type, 3 devices one above another
Compact fixed or withdrawable circuit breakers or swith-disconnectors, with motor mechanism						
NS630b to 1600	■	■		■		■
Masterpact fixed or withdrawable circuit breakers or swith-disconnectors, manual operation or with motor mechanism						
NT06 to 16	■	■		■		■
NW08 to 63	■	■	■	■	■	■
NT06 to NW63	■	■		■		

Complete source-changeover assembly for two switch-disconnectors

All possibilities for manual source-changeover systems

DB404170.eps

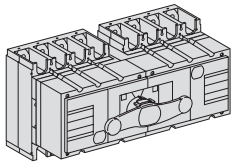

These assemblies provide an easy way to implement source changeover functions with:

- a single 3-position rotary handle that controls the two switch-disconnectors (Normal source ON, OFF, Replacement source ON)
- a smaller size, taking up less room in the switchboard.

A complete source changeover assembly can be ordered with a single catalogue number.

"Normal N"	"Replacement" R							
	INS250-100	INS250-160	INS200-200	INS250-250	INS320	INS400	INS500	INS630
INS250-100								
Ratings 100 A	■							
INS250-160								
Ratings 160 A		■						
INS200-200								
Ratings 200 A			■					
INS250-250								
Ratings 250 A				■				
INS320								
Ratings 320 A					■			
INS400								
Ratings 400 A						■		
INS500								
Ratings 500 A							■	
INS630								
Ratings 630 A								■

Interlocking of two or three toggle-controlled devices

Possible combinations of "Normal" and "Replacement" source circuit breakers

Db101566.eps

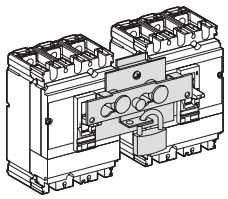

Two devices can be interlocked using this system. Two identical interlocking systems can be used to interlock three devices installed side by side, in which case one device is in the ON position and the two others are in the OFF position. Devices must all have the same configuration, i.e. fixed, plug-in, withdrawable or drawout.
The system is locked using one or two padlocks (shackle diameter 5 to 8 mm).
Two interlocking system models are available for:

- Compact NSX100 to 250
- Compact NSX400 to 630.

"Normal N"	"Replacement" R				
	NSX100	NSX160	NSX250	NSX400	NSX630
NSX100					
Ratings 16... 100 A	■	■	■	■	■
NSX160					
Ratings 80...160 A	■	■	■	■	■
NSX250					
Ratings 125...250 A	■	■	■	■	■
NSX400					
Ratings 150... 400 A	■	■	■	■	■
NSX630					
Ratings 630 A	■	■	■	■	■

Manual source-changeover systems
Possible combinations

Interlocking of a number of devices using keylocks (captive keys)

Combination of "Normal" and "Replacement" devices

Db101569.eps

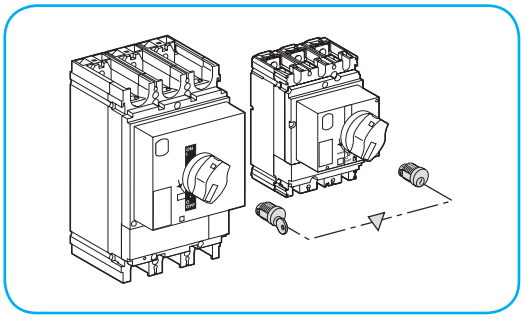

All Compact and Masterpact circuit breakers and Compact switch-disconnectors from 100 to 6300 A with rotary handles or motor mechanisms can be interlocked.

Interlocking is based on two identical keylocks with a single key and a keylock adapter (different for each device). This solution enables interlocking between two devices that are physically distant or that have very different characteristics, for example between a low and a medium-voltage device, or between Compact NSX circuit breakers and switch-disconnectors.
A system of wall-mounted captive key boxes makes possible a large number of combinations between many devices.

Interlocking of two devices with rotary handles

Possible combinations of "Normal" and "Replacement" source circuit breakers

Db101568.eps

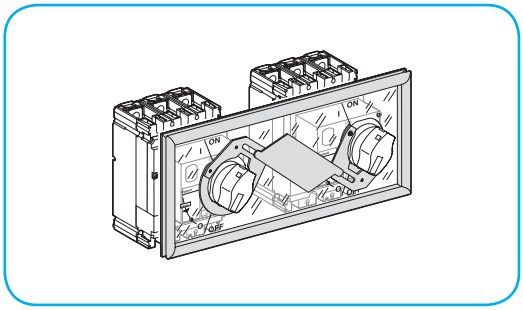

The direct or extended rotary handles are padlocked with the devices in the OFF position. The mechanism prevents simultaneous closing of the devices, but allows them to be opened.

"Normal N"	"Replacement" R				
Compact NSX100/630 (1)	**NSX100**	**NSX160**	**NSX250**	**NSX400**	**NSX630**
NSX100					
Ratings 16... 100 A	■	■	■	□	□
NSX160					
Ratings 80...160 A	■	■	■	□	□
NSX250					
Ratings 125...250 A	■	■	■	□	□
NSX400					
Ratings 160... 400 A	□	□	□	■	■
NSX630					
Ratings 630 A	□	□	□	■	■

□ *250 A and 630 A ratings can be mixed by using NSX400/630 rotary handle interlocking system.*

"Normal N"	"Replacement" R				
Compact NS630b/1600 (1)	**NS630b**	**NS800**	**NS1000**	**NS1200**	**NS1600**
NS630b					
Ratings 250... 630 A	■	■	■	■	■
NS800					
Ratings 320... 800 A	■	■	■	■	■
NS1000					
Ratings 400... 1000 A	■	■	■	■	■
NS1200					
Ratings 480... 1200 A	■	■	■	■	■
NS1600					
Ratings 640... 1600 A	■	■	■	■	■

(1) When mixing NSX100/250 and NSX400/630 circuit breakers, use the NSX400/630 interlocking system.

Possible combinations

Interlocking of two devices with rotary handles

Possible combinations of "Normal" and "Replacement" source switch-disconnectors

DB107742.eps

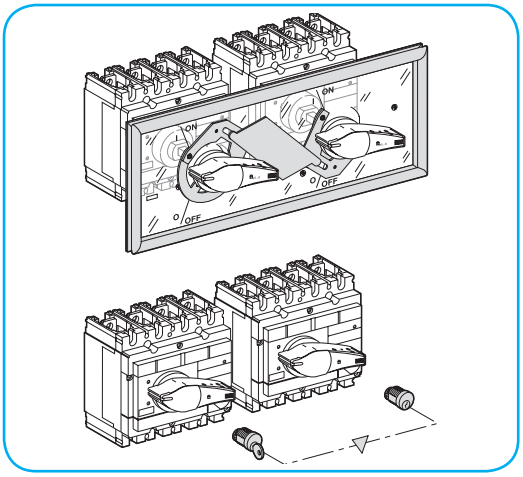

The direct or extended rotary handles are padlocked with the devices in the OFF position. The mechanism prevents simultaneous closing of the devices, but allows them to be opened.

"Normal N"	"Replacement" R					
Compact INS (1)	**INS40**	**INS63**	**INS80**	**INS100**	**INS125**	**INS160**
INS40						
Ratings 40 A	■	■	■	■	■	■
INS63						
Ratings 63 A	■	■	■	■	■	■
INS80						
Ratings 80 A	■	■	■	■	■	■
INS100						
Ratings 100 A	■	■	■	■	■	■
INS125						
Ratings 125 A	■	■	■	■	■	■
INS160						
Ratings 160 A	■	■	■	■	■	■

(1) With extended rotary handles only.
(2) Possible with INV, but visible-break function is significantly impaired.

"Normal N"	"Replacement" R							
Compact INS /INV (2)	**INS250-100/ INV100**	**INS250-160/ INV160**	**INS250-200/ INV200**	**INS250-250/ INV250**	**INS320/ INV320**	**INS400/ INV400**	**INS500/ INV500**	**INS630/ INV630**
INS250-100/INV100								
Ratings 100 A	■	■	■	■	□	□	□	
INS250-160/INV160								
Ratings 160 A	■	■	■	■				
INS250-200/INV200								
Ratings 200 A	■	■	■	■				
INS250-250/INV250								
Ratings 250 A	■	■	■	■	□			□
INS320/INV320								
Ratings 320 A	□			□	■	■	■	■
INS400/INV400								
Ratings 400 A					■	■	■	■
INS500/INV500								
Ratings 500 A					■	■	■	■
INS630/INV630								
Ratings 630 A	□			□	■	■	■	■

□ *250 A and 630 A ratings can be mixed by using INS320/630 rotary handle interlocking system.*

Interlocking of two devices on a base plate

Possible combinations of Compact NSX "Normal" and "Replacement" source circuit breakers

DB414891.eps

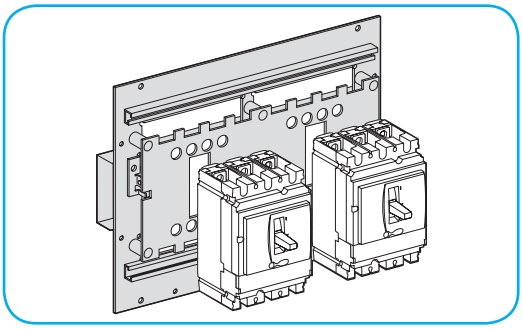

A base plate is available for mechanical interlocking of two manually-operated Compact NSX100 to 630 circuit breakers or switch-disconnectors.

"Normal N"	"Replacement" R				
	NSX100	**NSX160**	**NSX250**	**NSX400**	**NSX630**
NSX100					
Ratings 16... 100 A	■	■	■	■	■
NSX160					
Ratings 80... 160 A	■	■	■	■	■
NSX250					
Ratings 125... 250 A	■	■	■	■	■
NSX400					
Ratings 150... 400 A	■	■	■	■	■
NSX630					
Ratings 630 A	■	■	■	■	■

Interlocking of a number of devices using keylocks (captive keys)

Combination of Masterpact devices

Db101903.eps

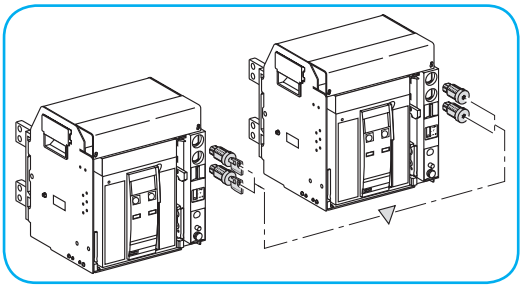

Interlocking uses two identical keylocks with a single key. This solution enables interlocking between two devices that are physically distant or that have significantly different characteristics.

	Compact NS	Masterpact	
	NS630b to NS1600	NT06 to 16	NW08 to 63
	N / H / L NA	N1 / H1 / H2 / H3 / L1 NA / HA / HF	N1 / H1 / H2 / H3 / L1 NA / HA / HF
	all devices NS630b to 1600 N/H/L/NA fixed or plug-in	all mixing possibilities (fixed, drawout or fixed + drawout) N1/H1/H2/H3/L1/NA/HA/HF	all mixing possibilities (fixed, drawout or fixed + drawout) N1/H1/H2/H3/L1/NA/HA/HF
	250 to 1600 A	600 to 1600 A	800 to 6300 A
	750	1000	1000
		■	■
		3, 4	
	See page A-14		
		-25 °C to +70 °C (50 °C for 440 V - 60 Hz)	
		48 to 415 V - 50/60 Hz 440 V - 60 Hz	
	24-250 V	24-250 V	24-250 V
	180 VA 180 W	180 VA 180 W	180 VA 180 W
	800 ms	800 ms	800 ms
	■ ■ 1 OF + 1 CE (+ SDE)	■ only with UA or BA 1 OF + 1 CE + 1 PF	■ only with UA or BA 1 OF + 1 CE + 1 PF
	■	■	■
	■ ■	■ ■	■ ■
	■	■	■
	■	■	■
	■ ■	■ ■	■ ■
	■	■ ■	■ ■
	2 OF + SD	2 OF + SD	2 OF + SD
	■ ■	■ ■	■ ■
		■	■
		■	■
		■	■
		■	■
		■ BA controller	
		■ UA controller	
	■	■	■
	■	■	■
	■	■	■
	■	■	■
	■ (vertical or horizontal)	■ (vertical or horizontal)	■ (vertical or horizontal)
	■ (drawout)	■ (drawout)	■ (drawout)
	■		
	■		
	■ ■	■ ■	■ ■
	■	■	■

Remote-operated source-changeover systems

Mech. and elect. durability Compact INS, Compact NSX, NS, Masterpact NT/NW

Compact INS switch-disconnectors

			INS250-100		INS250-160		INS250-200		INS250	
Number of poles			3, 4		3, 4		3, 4		3, 4	
Conventional thermal current (A)	Ith	at 60 °C	100		160		200		250	
Rated operational current (A)	Ie	**Electrical AC, 50/60 Hz**	**AC22A**	**AC23A**	**AC22A**	**AC23A**	**AC22A**	**AC23A**	**AC22A**	**AC23A**
		440-480 V	100	100	160	160	200	200	250	250
		660-690 V	100	100	160	160	200	200	250	250
Durability (category A) (O_N-C_R-O_R-C_N cycles)		Mechanical	15000		15000		15000		15000	
		Electrical AC, 50/60 Hz	**AC22A**	**AC23A**	**AC22A**	**AC23A**	**AC22A**	**AC23A**	**AC22A**	**AC23A**
		440-480 V	1500	1500	1500	1500	1500	1500	1500	1500
		660-690 V	1500	1500	1500	1500	1500	1500	1500	1500

			INS320		INS400		INS500		INS630	
Number of poles			3, 4		3, 4		3, 4		3, 4	
Conventional thermal current (A)	Ith	at 60 °C	320		400		500		630	
Rated operational current (A)	Ie	**Electrical AC, 50/60 Hz**	**AC22A**	**AC23A**	**AC22A**	**AC23A**	**AC22A**	**AC23A**	**AC22A**	**AC23A**
		440-480 V	320	320	400	400	500	500	630	630
		660-690 V	320	320	400	400	500	500	630	630
Durability (category A) (O_N-C_R-O_R-C_N cycles)		Mechanical	10000		10000		10000		10000	
		Electrical AC, 50/60 Hz	**AC22A**	**AC23A**	**AC22A**	**AC23A**	**AC22A**	**AC23A**	**AC22A**	**AC23A**
		440-480 V	1500	1500	1500	1500	1500	1500	1500	1500
		660-690 V	1500	1500	1500	1500	1500	1500	1500	1500

Compact NSX100-630, Compact NS630b-1600

	NSX100-250	NSX400-630	NS630b-NS1600
Number of poles	3, 4	3, 4	3, 4
Rated current In (A)	100 to 250	400 to 630	630 to 1600
Mechanical durability (O_N-C_R-O_R-C_N cycles)	20000 - 40000 - 50000	15000	8000
Electrical durability at In (O_N-C_R-O_R-C_N cycles) for ≤ 440 V and 480 V NEMA (2)	10000 - 20000 - 30000	4000 - 6000	2000
Electrical durability at In (O_N-C_R-O_R-C_N cycles) for U = 500 V to 690 V (2)	5000 - 7500 - 10000	2000 - 3000	1500

Masterpact NT06-NT16/NW08-NW63 (1)

	NT06-NT10	NT12-NT16	NW08-NW16	NW20	NW25-NW40	NW50-NW63
Number of poles	3, 4	3, 4	3, 4	3, 4	3, 4	3, 4
Rated current In (A)	630 to 1600	1250 to 1600	800 to 1600	2000	2500 to 4000	5000 to 6300
Mechanical durability (O_N-C_R-O_R-C_N cycles)	8000	8000	10000	10000	10000	5000
Electrical durability at In (O_N-C_R-O_R-C_N cycles) for ≤ 440 V and 480 V NEMA (2)	6000	6000 NT16: 3000	10000	8000	5000	1500
Electrical durability at In (O_N-C_R-O_R-C_N cycles) for U = 500 V to 690 V (2)	3000	2000 NT16: 1000	10000	6000	2500	1500

(1) Mechanical and electrical durability not applicable to Masterpact H3 and L versions.
(2) Electrical durability tests carried out with a power factor of 0.8 as per IEC 947-2.

Note:
O_N: opening of Normal source
C_R: closing of Replacement source
O_R: opening of Replacement source
C_N: closing of Normal source

DB413568.eps

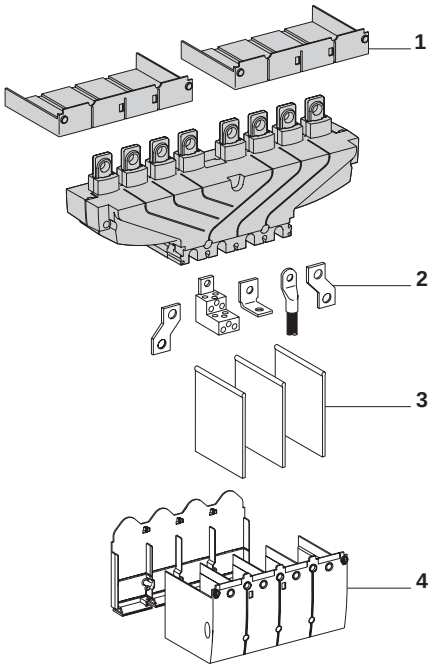

1 *Short terminal shields*
2 *Terminals*
3 *Interphase barriers*
4 *Long terminal shields*

Downstream coupling accessory

This accessory simplifies connection to bars and cables with lugs.
It may be used to couple two circuit breakers (Compact NSX100 to 630) or switch-disconnectors (Compact INS/INV100 to 630) of the same size.
Pitch between outgoing terminals:

- Compact INS250 and INV100 to 250: 35 mm
- Compact INS/INV320 to 630: 45 mm
- Compact NSX100 to 250: 35 mm
- Compact NSX400 to 630: 45 mm.

For Compact NSX circuit breakers, the downstream coupling accessory can be used only with **fixed versions**.

Connection and insulation accessories

The coupling accessory can be fitted with the same connection and insulation accessories as the circuit breakers and switch-disconnectors.

Possible uses	Downstream coupling	
	Possible mounting	Outgoing pitch (mm)
Manual source-changeover systems		
INS250 (100 to 250 A) with rotary handle	■	35
NSX100/250 with rotary handle	■	35
NSX100/250 on base plate with toggle control	■	35
INS400/630 (320 to 630 A) with rotary handle	■	45
NSX400/630 with rotary handle	■	45
NSX400/630 on base plate with toggle control	■	45
Complete source-changeover assembly		
INS250 (100 to 250 A)	■	35
INS400/630 (320 to 630 A)	■	45
Remote-operated source-changeover systems		
NSX100/250	■	35
NSX400/630	■	45

Remote-operated source-changeover systems
Electrical interlocking

Electrical interlocking is used with a mechanical interlocking system.
An automatic controller may be added to take into account information from the distribution system.

Morover, the relays controlling the closing order to the “Normal” and “Replacement” circuit-breakers must be mechanically and/or electrically interlocked to prevent them from giving simultaneous closing commands.

Electrical interlocking is carried out by an electrical control device.
For Compact NSX up to 630 A, electrical interlocking is implemented by the IVE unit integrating control circuits and an external terminal block in accordance with the pages C-5 to C-4 of the chapter “Electric diagrams” of this catalogue.
The integrated control circuits implement the time delays required for correct source transfer.
For Compact NS630b to 1600 and Masterpact, this function can be implemented in one of two ways:
- using the IVE unit
- by an electrician based on the diagrams in accordance with the pages C-9 to C-14 of the chapter “Electric diagrams” of this catalogue.

Characteristics of the IVE unit
- External connection terminal block:
  - inputs: circuit breaker control signals
  - outputs: status of the SDE contacts on the “Normal” and “Replacement” source circuit breakers.
- 2 connectors for the two “Normal” and “Replacement” source circuit breakers:
  - inputs:
    - status of the OF contacts on each circuit breaker (ON or OFF)
    - status of the SDE contacts on the “Normal” and “Replacement” source circuit breakers
  - outputs: power supply for operating mechanisms.
- Control voltage:
  - 24 to 250 V DC
  - 48 to 415 V 50/60 Hz - 440 V 60 Hz.

The IVE unit control voltage must be same as that of the circuit breaker operating mechanisms.

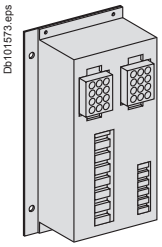

IVE unit.

Necessary equipment
For Compact NSX100 to 630, each circuit breaker must be equipped with:
- a motor mechanism
- an OF contact
- an SDE contact.

The components are supplied ready for assembly and the circuit breakers prewired. The prewiring must not be modified.

For Compact NS630b to 1600, each circuit breaker must be equipped with:
- a motor mechanism
- an available OF contact
- a CE connected-position contact (carriage switch) on withdrawable circuit breakers
- an SDE contact.

For Masterpact NT and NW, each circuit breaker must be equipped with:
- a remote-operation system made up of:
  - MCH gear motor
  - MX or MN opening release
  - XF closing release
  - PF “ready to close” contact
- an available OF contact
- one to three CE connected-position contacts (carriage switches) on drawout circuit breakers (depending on the installation).

Compact NS, Masterpact NT and NW

Types of mechanical interlocking	Possible combinations	Typical electrical diagrams	Diagram no.
2 devices			
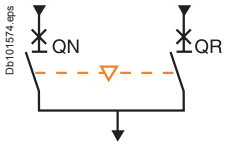	QN QR 0 0 1 0 0 1	**Compact NSX100 to 630:** ■ electrical interlocking without emergency power off (EPO) auxiliaries: □ with EPO by MN □ with EPO by MX **Compact NS630b to 1600:** ■ electrical interlocking with lockout after fault: □ permanent replacement source (with IVE) □ with EPO by MX (with IVE) □ with EPO by MN (with IVE) **Masterpact NT and NW:** ■ electrical interlocking with lockout after fault: □ permanent replacement source (with IVE) □ with EPO by MX (with IVE) □ with EPO by MN (with IVE) ■ automatic control with lockout after fault: □ permanent replacement source (with IVE) □ engine generator set (with IVE) ■ BA/UA controller (with IVE)	 **51201177** **51201178** **51201179** **51201183** **51201184** **51201185** **51201142** **51201143** **51201144** **51156904** **51156905** **51156903**

Masterpact NW only

Types of mechanical interlocking	Possible combinations	Typical electrical diagrams	Diagram no.
3 devices: 2 "Normal" sources and 1 "Replacement" source			
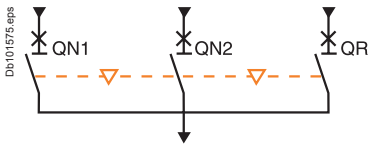	QN1 QN2 QR 0 0 0 1 1 0 0 0 1	■ electrical interlocking: □ without lockout after fault □ with lockout after fault	 **51156906** **51156907**
3 devices: 2 "Normal" sources and 1 "Replacement" source with source selection			
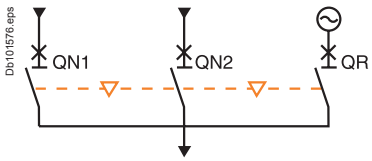	QN1 QN2 QR 0 0 0 1 0 0 0 0 1 1 1 0 0 1 0	■ automatic control with engine generator set: □ without lockout after fault (with MN) □ with lockout after fault (with MN)	 **51156908** **51156909**
3 devices: 3 sources, only one device			
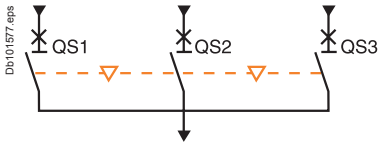	QS1 QS2 QS3 0 0 0 1 0 0 0 1 0 0 0 1	■ electrical interlocking: □ without lockout after fault □ with lockout after fault	 **51156910** **51156911**
3 devices: 2 sources + 1 coupling			
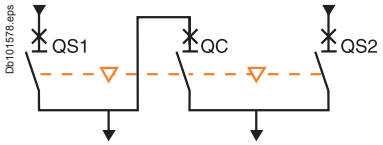	QS1 QC QS2 0 0 0 1 0 1 1 1 0 0 1 1 1 0 0 (1) 0 0 1 (1) *(1) possible by forcing operation*	■ electrical interlocking: □ without lockout after fault □ with lockout after fault ■ automatic control with lockout after fault	 **51156912** **51156913** **51156914**

"Lockout after fault" option. This option makes it necessary to manually reset the device following fault tripping.

Associated controllers
Controller selection

By combining a remote-operated source-changeover system with an integrated BA or UA automatic controller, it is possible to automatically control source transfer according to user-selected sequences.
These controllers can be used on source-changeover systems comprising 2 circuit breakers.
For source-changeover systems comprising 3 circuit breakers, the automatic control diagram must be prepared by the installer as a complement to to diagrams provided in the “electrical diagrams” section of this catalogue.

DB403809.eps

BA controller.

DB403810.eps

UA controller.

Controller		BA	UA
Compatible circuit breakers		All Compact NS, Compact NSX and Masterpact circuit breakers	
4-position switch			
Automatic operation		■	■
Forced operation on “Normal” source		■	■
Forced operation on “Replacement” source		■	■
Stop (both “Normal” and “Replacement” sources off)		■	■
Automatic operation			
Monitoring of the “Normal” source and automatic transfer		■	■
Generator set startup control			■
Delayed shutdown (adjustable) of generator set			■
Load shedding and reconnection of non-priority circuits			■
Transfer to the “Replacement” source if one of the phases of the “Normal” phase is absent			■
Test			
By opening the P25M circuit breaker supplying the controller		■	
By pressing the test button on the front of the controller			■
Indications			
Circuit breaker status indication on the front of the controller: on, off, fault trip		■	■
Automatic mode indicating contact		■	■
Other functions			
Selection of type of “Normal” source (single-phase or three-phase) (1)			■
Voluntary transfer to “Replacement” source (e.g. energy management commands)		■	■
During peak-tariff periods (energy management commands) forced operation on “Normal” sourceif “Replacement” source not operational			■
Additional contact (not part of controller). Transfer to “Replacement” source only if contact is closed (e.g. used to test the frequency of UR).		■	■
Setting of maximum startup time for the replacement source			■
Options			
Communication option			
Power supply			
Control voltages (2)	110 V	■	■
	220 to 240 V 50/60 Hz	■	■
	380 to 415 V 50/60 Hz and 440 V 60 Hz	■	■
Operating thresholds			
Undervoltage	0.35 Un ⩽ voltage ⩽ 0.7 Un	■	■
Phase failure	0.5 Un ⩽ voltage ⩽ 0.7 Un		■
Voltage presence	voltage ⩾ 0.85 Un	■	■
IP degree of protection (EN 60529) and IK degree of protection against external mechanical impacts (EN 50102)			
Front	IP40	■	■
Side	IP30	■	■
Connectors	IP20	■	■
Front	IK07	■	■
Characteristics of output contacts (dry, volt-free contacts)			
Rated thermal current (A)	8		
Minimum load	10 mA at 12 V		
Output contacts:			
Position of the Auto/Stop switch		■	■
Load shedding and reconnection order			■
Generator set start order.			■

		AC				DC	
Utilisation category (IEC 947-5-1)		AC12	AC13	AC14	AC15	DC12	DC13
Operational current (A)	24 V	8	7	5	5	8	2
	48 V	8	7	5	5	2	-
	110 V	8	6	4	4	0.6	-
	220/240 V	8	6	4	3	-	-
	250 V	-	-	-	-	0.4	-
	380/415 V	5	-	-	-	-	-
	440 V	4	-	-	-	-	-
	660/690 V	-	-	-	-	-	-

(1) For example, 220 V single-phase or 220 V three-phase.
(2) The controller is powered by the ACP control plate. The same voltage must be used for the ACP plate, the IVE unit and the circuit breaker operating mechanisms. If this voltage is the same as the source voltage, then the “Normal” and “Replacement” sources can be used directly for the power supply. If not, an isolation transformer must be used.

PB100857_SE.eps

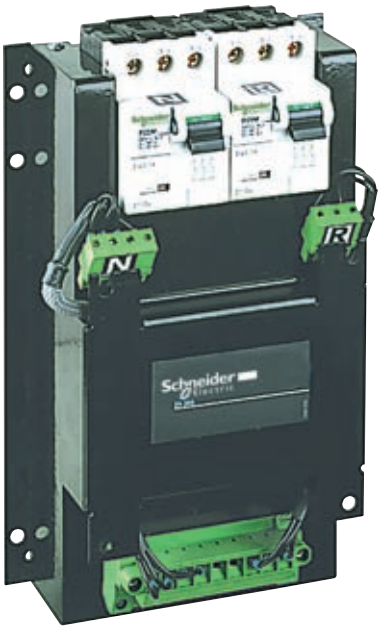

ACP control plate.

ACP control plate

The control plate provides in a single unit:

- protection for the BA or UA controller with two highly limiting P25M circuit breakers (infinite breaking capacity) for power drawn from the AC source
- control of circuit-breaker ON and OFF functions via two relay contactors
- connection of the circuit breakers to the BA or UA controller via a built-in terminal block.

Control voltages

- 110 V 50/60 Hz.
- 220 to 240 V 50/60 Hz.
- 380 to 415 V 50/60 Hz and 440 V 60 Hz.

The same voltage must be used for the ACP control plate, the controller and the circuit breaker operating mechanisms.

Installation

Connection between the ACP control plate and the IVE unit may use:

- wiring done by the installer
- prefabricated wiring (optional).

Installation of the BA and UA controllers

The BA and UA controllers may be installed in one of two manners:

- directly mounted on the ACP control plate
- mounted on the front panel of the switchboard
- if the length of the connection between the controller and the control plate (ACP) is less than or equal to 1 m, the connecting cable **ref. 29368** can be ordered as an optional extra. Cables longer than 1 m, but not longer than 2 m will be the responsibility of the installer.

DB126269.eps

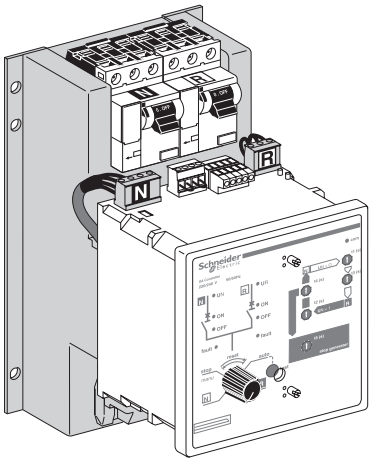

Mounting on the ACP control plate.

DB126270.eps

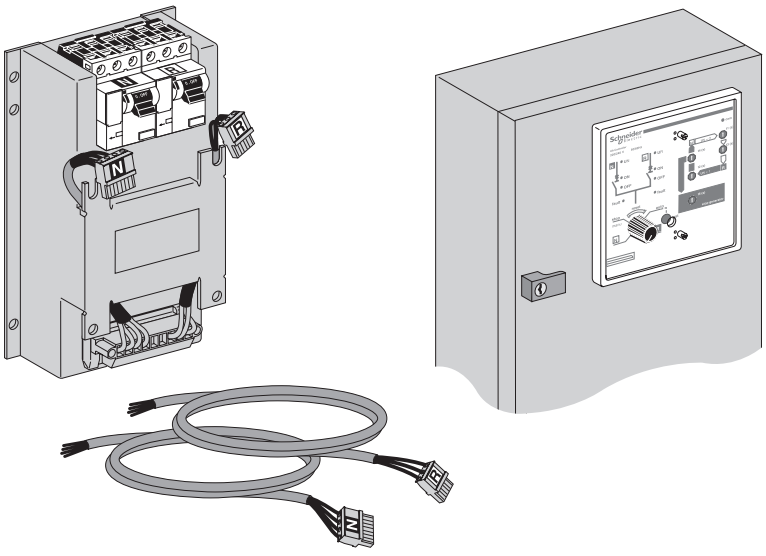

Mounting on the front panel of the switchboard.

Associated controllers
BA controller

The BA controller is used to create simple source-changeover systems that switch from one source to another depending on the presence of voltage UN on the “Normal” source.
It is generally used to manage two permanent sources and can control Compact NS, Compact NSX and Masterpact NT/NW circuit breakers and switch-disconnectors.

DB403841.eps

DB403838.eps

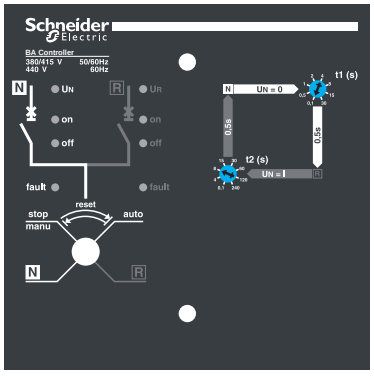

Front of the BA controller.

Operating modes
A four-position switch may be used to select:
- automatic operation
- forced operation on the “Normal” source
- forced operation on the “Replacement” source
- stop (both “Normal” and “Replacement” sources off).

Setting the time delays
Time delays are set on the front of the controller.
t1. delay between detection that the “Normal” source has failed and the transmission of the order to open the “Normal” source circuit breaker (adjustable from 0.1 to 30 seconds).
t2. delay between detection that the “Normal” source has returned and the transmission of the order to open the “Replacement” source circuit breaker (adjustable from 0.1 to 240 seconds).

Circuit breaker commands and status indications
The status of the circuit breakers is indicated on the front of the controller.
- ON, OFF, fault.

A built-in terminal block may be used to connect the following input/output signals:
- inputs:
  - voluntary order to transfer to source R (e.g. for special tariffs, etc.)
  - additional control contact (not part of the controller). Transfer to the “Replacement” source takes place only if the contact is closed (e.g. used to test the frequency of UR, etc.)
- outputs:
  - indication of operation in automatic or stop mode via changeover contacts.

Test
It is possible to test the operation of the BA controller by turning OFF (opening) the P25M circuit breaker for the “Normal” source and thus simulating a failure of voltage UN.

BA controller
Operating sequences

Switch set to Auto (automatic operation and special-tariff mode)

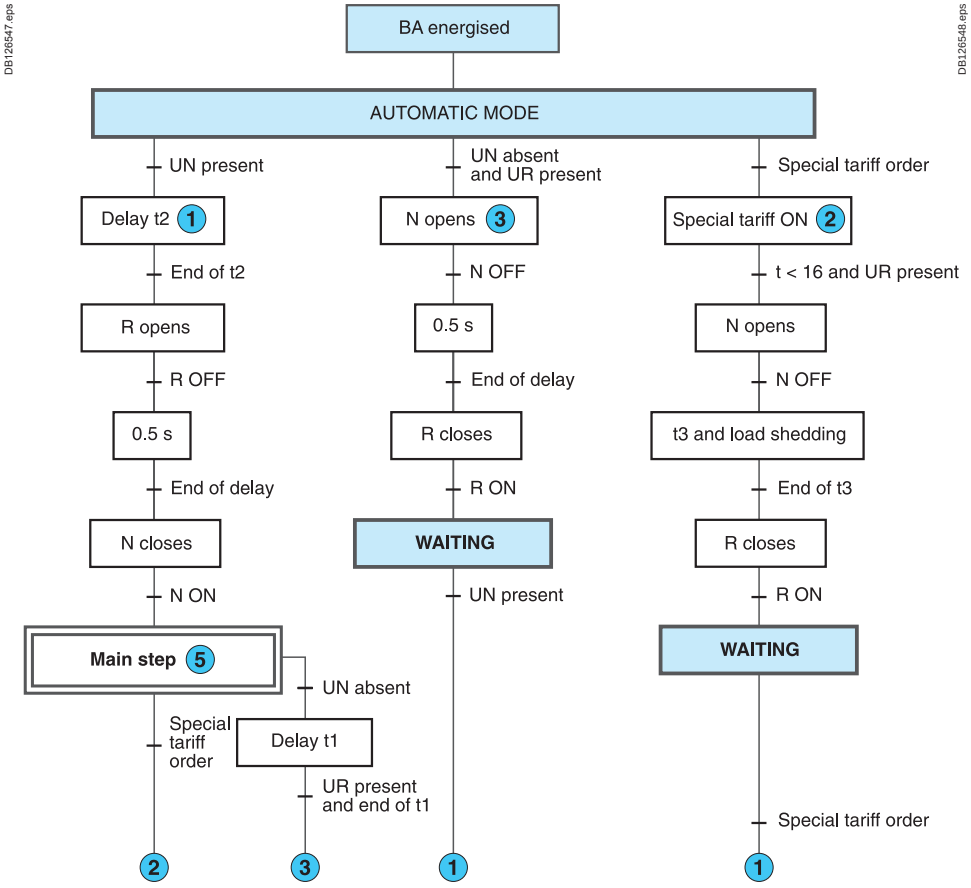

Switch set to the "N" position (forced operation on the "Normal" source)

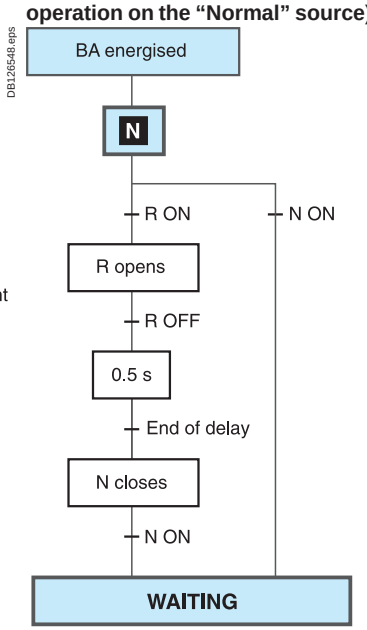

Switch set to the "R" position (forced operation on the "Replacement" source)

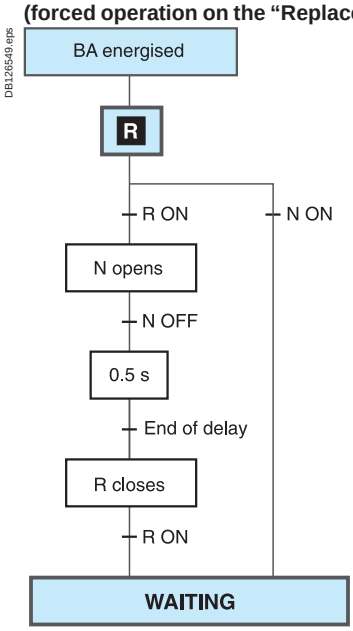

Switch set to the "Stop" position

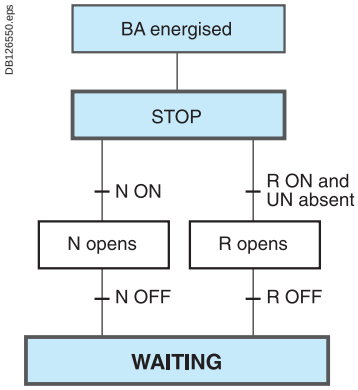

Key
UN : "Normal" source voltage
UR : "Replacement" source voltage
N : "Normal" source circuit breaker
R : "Replacement" source circuit breaker

1 *The number sends to the indicated step when the condition is true.*

WAITING The system exits this mode when the operating mode is modified or when an external event occurs (e.g. failure or return of UN).

Associated controllers
UA controller

The UA controller is used to create a source-changeover system integrating the following automatic functions:
■ transfer from one source to another depending on the presence of voltage UN on the “Normal” source
■ startup of an engine generator set
■ shedding and reconnection of non-priority circuits
■ transfer to the “Replacement” source if one of the phases on the “Normal” source fails.
The UA controller can control Compact NS, Compact NSX and Masterpact NT/NW devices.

DB403842.eps

DB403837.eps

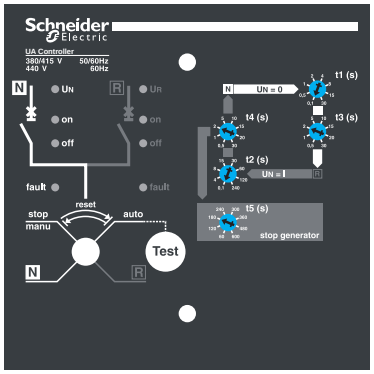

Front of the UA controller.

Operating modes
A four-position switch may be used to select:
■ automatic operation
■ forced operation on the “Normal” source
■ forced operation on the “Replacement” source
■ stop (both “Normal” and “Replacement” sources off, then manual operation).

Setting the time delays
Time delays are set on the front of the controller.
t1. delay between detection that the “Normal” source has failed and the transmission of the order to open the “Normal” source circuit breaker (adjustable from 0.1 to 30 seconds).
t2. delay between detection that the “Normal” source has returned and the transmission of the order to open the “Replacement” source circuit breaker (adjustable from 0.1 to 240 seconds).
t3. delay following opening of QN with load shedding and before closing of QR (adjustable from 0.5 to 30 seconds).
t4. delay following opening of QR with load reconnection and before closing of QN (adjustable from 0.5 to 30 seconds).
t5. delay for confirmation that UN is present before shutting down the engine generator set (adjustable from 60 to 600 seconds).
t6. delay before startup of the engine generator set (120 or 180 seconds).

Commands and indications
Circuit breaker status indications on the front of the controller:
■ ON, OFF, fault.
A built-in terminal block may be used to connect the following input/output signals:
■ inputs:
□ voluntary order to transfer to source R (e.g. for special tariffs, etc.)
□ additional control contact (not part of the controller). Transfer to the “Replacement” source takes place only if the contact is closed (e.g. used to test the frequency of UR, etc.)
■ outputs:
□ control of an engine generator set (ON / OFF)
□ shedding of non-priority circuits
□ indication of operation in automatic mode via changeover contacts.

Distribution-system settings
Three switches are used to:
■ select the type of “Normal” source, whether single-phase or three-phase (e.g. 240 V single-phase or 240 V three-phase)
■ select whether to remain (or not) on the “Normal” source if the “Replacement” source is not operational during operation on special tariffs
■ select the maximum permissible startup time for the engine generator set during operation on special tariffs (120 or 180 seconds).

Test
A pushbutton on the front of the controller may be used to test transfer from the “Normal” source to the “Replacement” source, then the return to the “Normal” source. The test lasts approximately three minutes.

COM communications option
Using the internal bus protocol, this option may be used to remote the following information:
■ circuit breaker status (ON, OFF, fault trip)
■ presence of the “Normal” and “Replacement” voltages
■ presence of an order for forced operation (e.g. special tariffs)
■ settings and configuration information
■ status of non-priority circuits (loads shed or not)
■ position of the switch (stop, auto, forced operation on the “Normal” source, forced operation on the “Replacement” source).

UA controller
Operating sequences
Forced operation mode

Switch set to the “R” position (forced operation on the “Replacement” source)

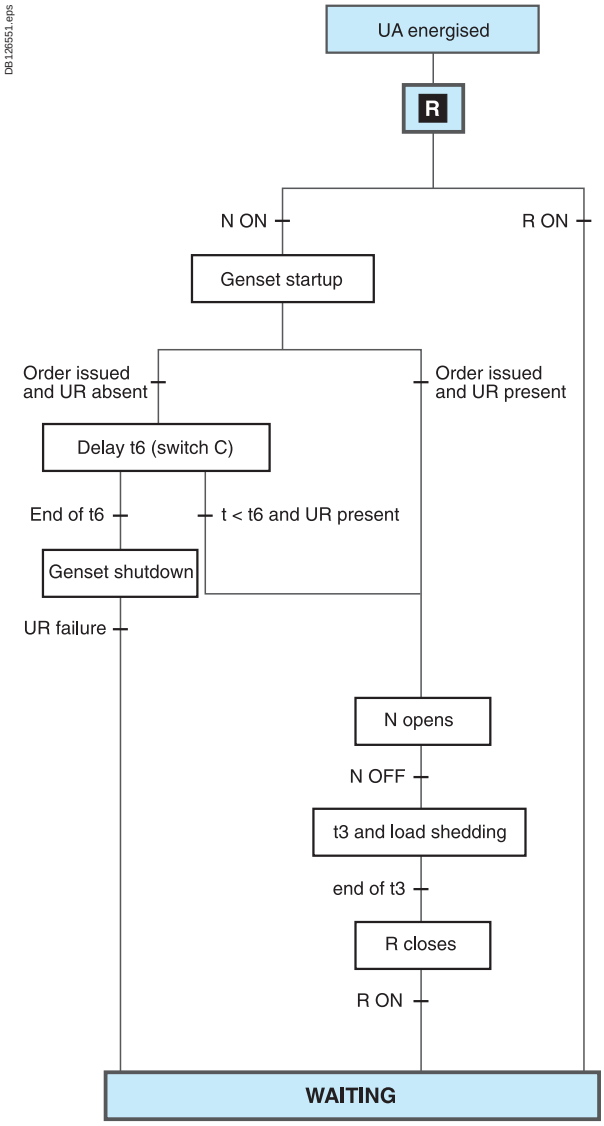

Switch set to the “N” position (forced operation on the “Normal” source)

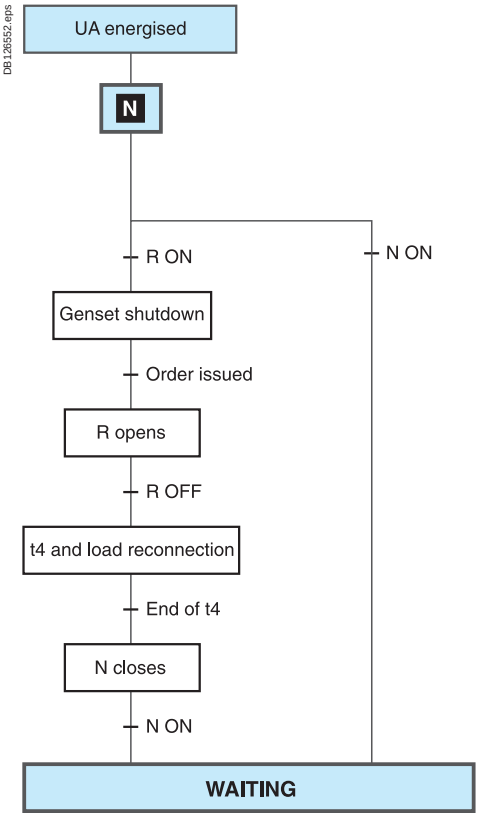

Switch set to the “Stop” position

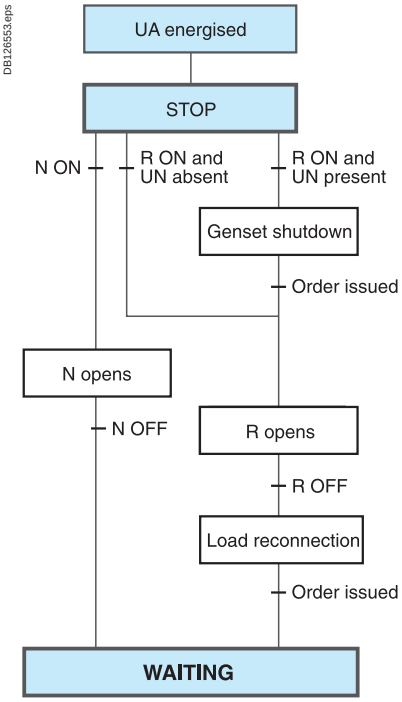

WAITING The system exits this mode when the operating mode is modified or when an external event occurs (e.g. failure or return of UN).

When the UA controller is not energised, the output for generator set startup is activated).

Key
UN : “Normal” source voltage
UR : “Replacement” source voltage
N : “Normal” source circuit breaker
R : “Replacement” source circuit breaker

Associated controllers
UA controller
Operating sequences
Special-tariff mode

Switch set to the “Auto” position (special-tariff mode)

DB126554.eps

WAITING The system exits this mode when the operating mode is modified or when an external event occurs (e.g. failure or return of UN).

When the UA controller is not energised, the output for generator set startup is activated).

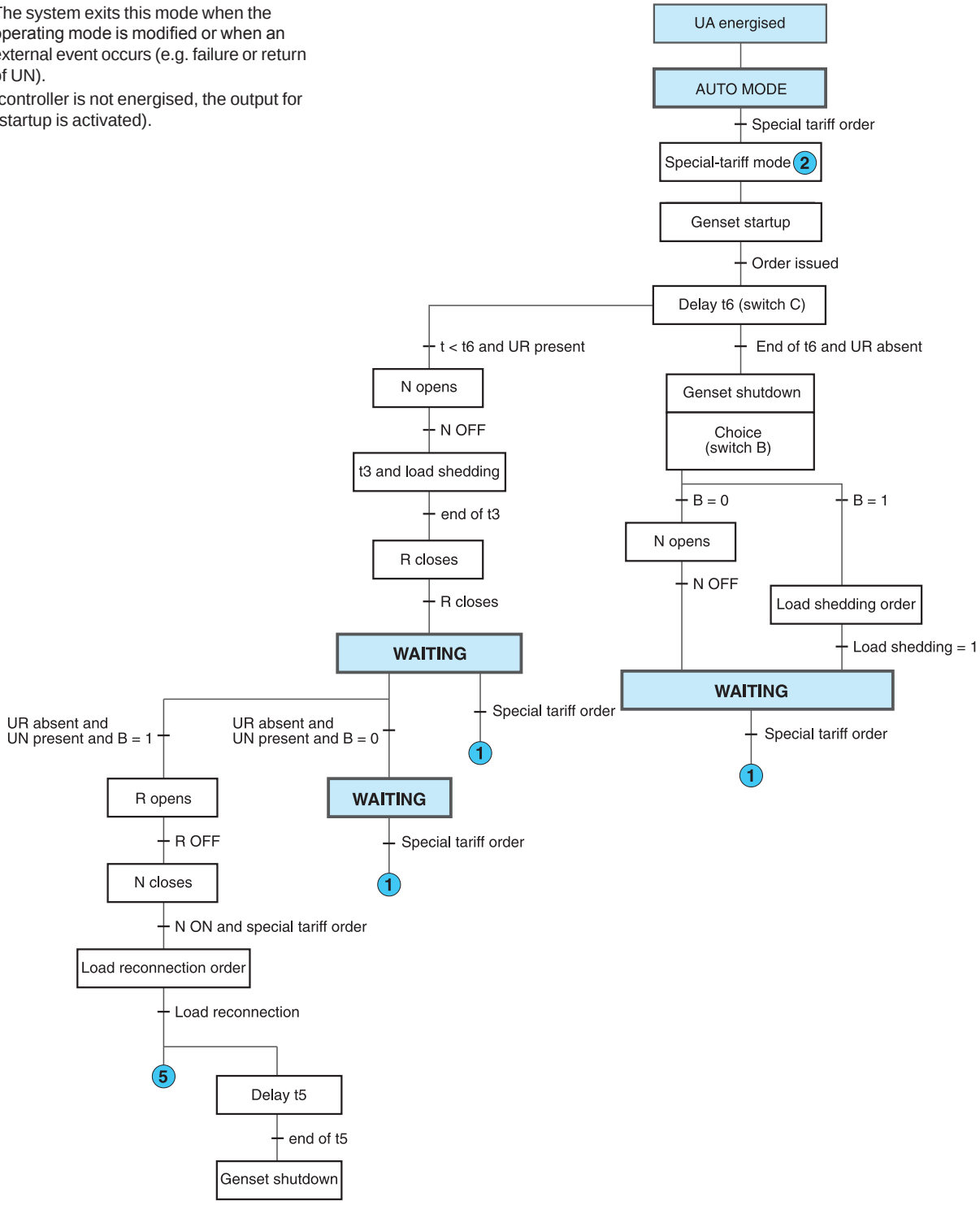

Key
UN : “Normal” source voltage
UR : “Replacement” source voltage
N : “Normal” source circuit breaker
R : “Replacement” source circuit breaker
B : Penalties accepted (N ON), i.e. B = 1

(1) *The number sends to the indicated step when the condition is true.*

Switch set to the "Auto" position (automatic operation and test mode).

DB126555.eps

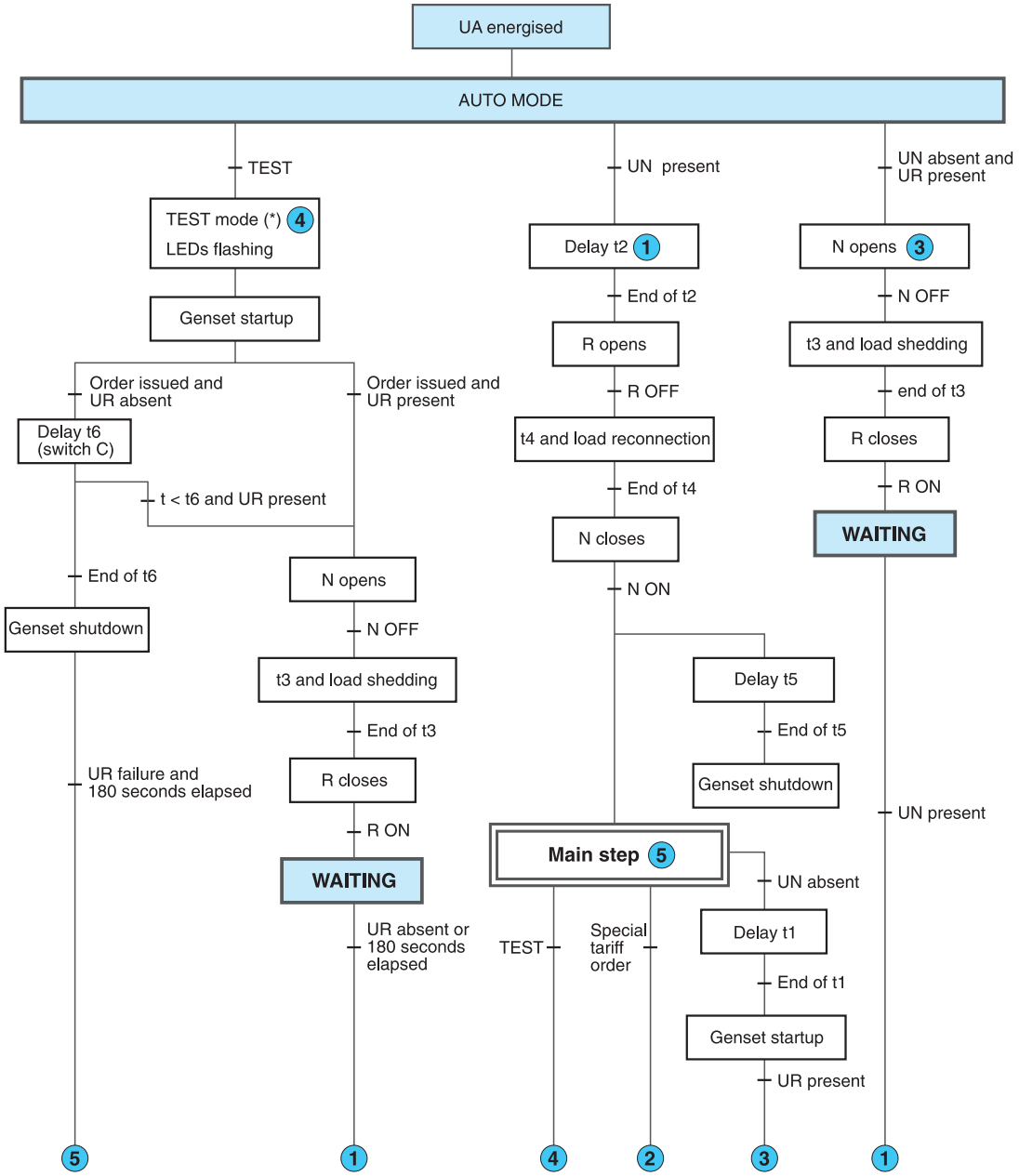

WAITING The system exits this mode when the operating mode is modified or when an external event occurs (e.g. failure or return of UN).

When the UA controller is not energised, the output for generator set startup is activated).

Key
UN : "Normal" source voltage
UR : "Replacement" source voltage
N : "Normal" source circuit breaker
R : "Replacement" source circuit breaker
B : Penalties accepted (N ON), i.e. B = 1
(*) The test lasts 180 seconds.

1 *The number sends to the indicated step when the condition is true.*

Operating sequences
IVE unit

IVE unit

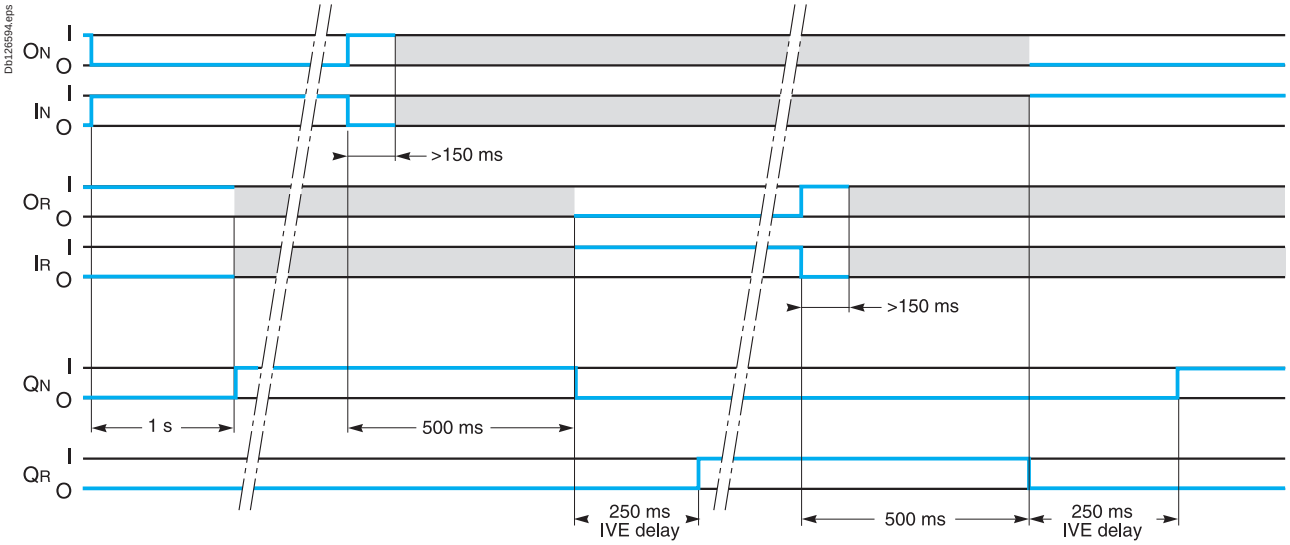

Symbols

QN : "Normal" Compact circuit breaker equipped for remote operation (motor mechanism)
QR : "Replacement" Compact circuit breaker equipped for remote operation (motor mechanism)
ON : Circuit breaker QN opening order
OR : Circuit breaker QR opening order
IN : Circuit breaker QN closing order
IR : Circuit breaker QR closing order
L1 : Faulty "Normal" indication LED
L2 : Faulty "Replacement" indication LED

Key
O: OFF (circuit open)
I: ON (circuit closed
: either ON or OFF.

Note: *following all trips (overload, short-circuit, earth-leakage fault, voluntary trip), a manual reset on the front of the motor mechanism is required.*

BA controller

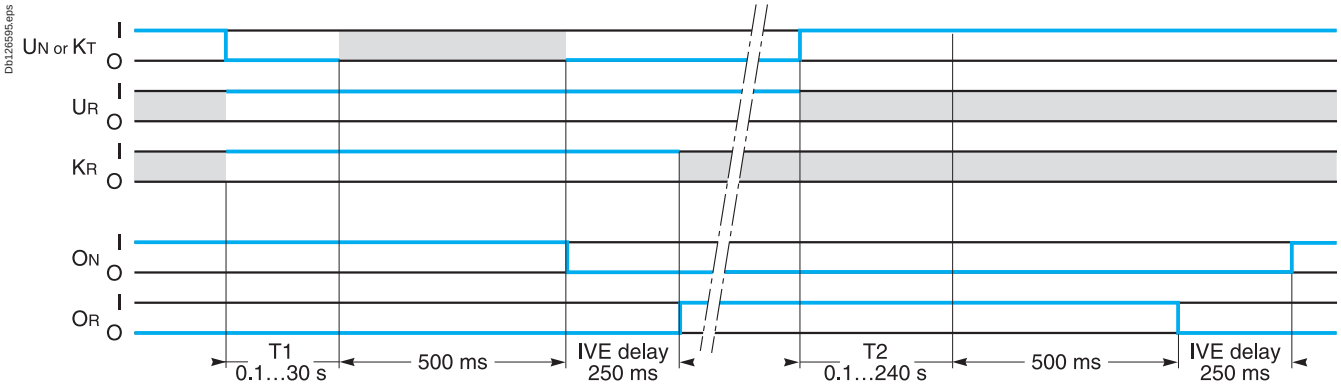

Inputs
UN : "Normal" source voltage
UR : "Replacement" source voltage
KT : order for forced-operation on R
KR : additional check before transfer

Outputs
QN : "Normal" source circuit breaker
QR : "Replacement" source circuit breaker

UA controller

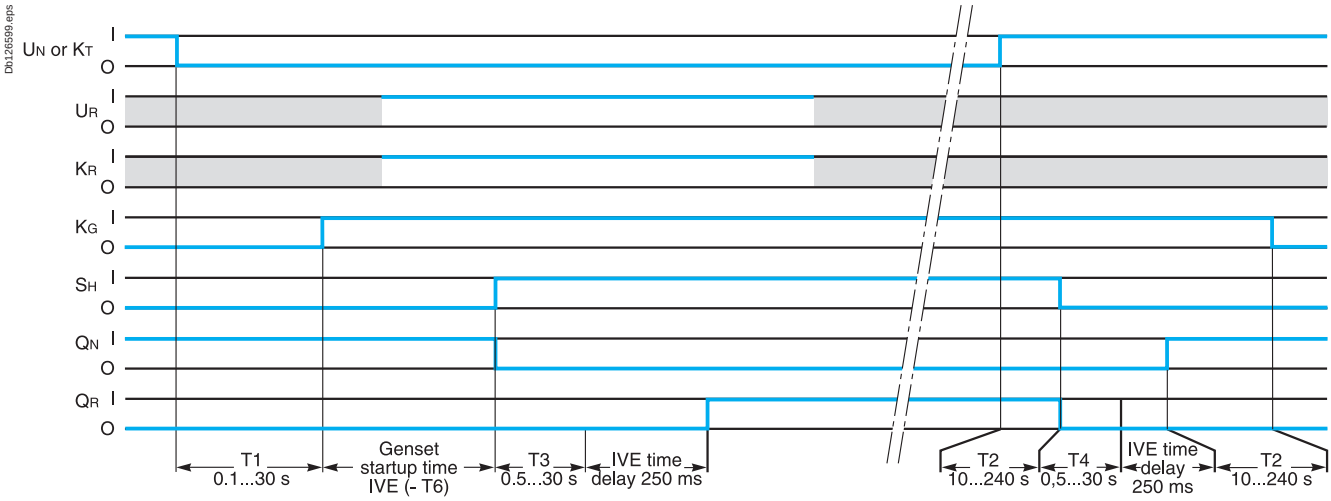

Inputs
UN : "Normal" source voltage
UR : "Replacement" source voltage
KT : order for forced-operation on R
KR : additional check before transfer

Outputs
KG : order to the genset
SH : load-shedding order
QN : "Normal" source circuit breaker
QR : "Replacement" source circuit breaker

Key
O: OFF (circuit open)
I: ON (circuit closed
: either ON or OFF.

Important
If UR is not ON when the transfer order is issued (KT or UN), the sequence is not carried out.
If KR status is not ON when the transfer order is issued (KT or UN), the transfer sequence is carried out later when KR status becomes I.

COM communications option

DB404157.eps

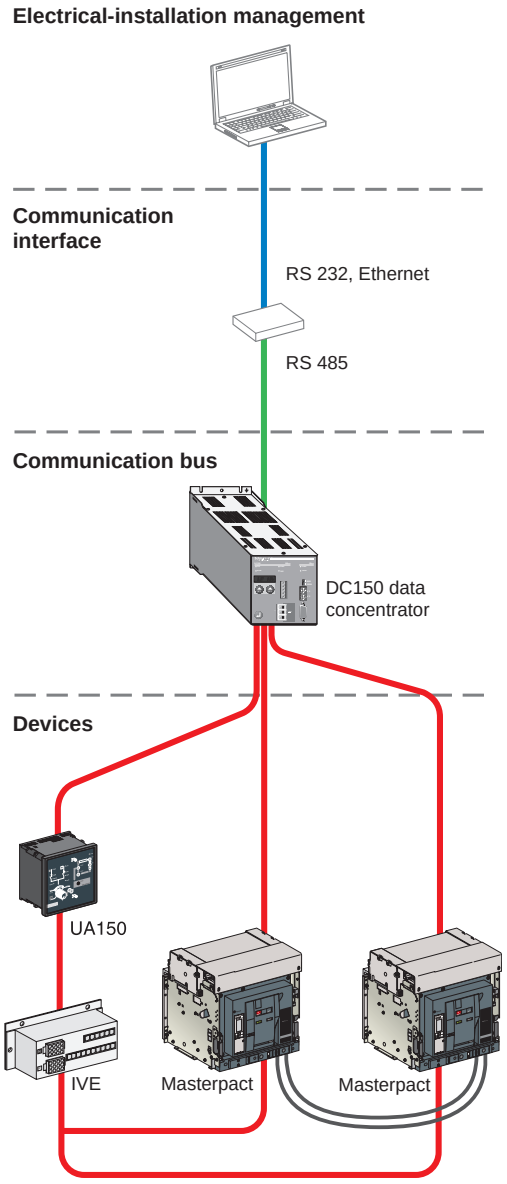

Communications option for Compact NS ≥ 630 A and Masterpact NT/NW

The COM communications option is compatible with all the source-changeover systems for Compact NS630b-1600 and Masterpact NT/NW circuit breakers and switch-disconnectors.
It can be used to remote status information. It may not be used to operate the circuit breakers (only possible locally on the front of the UA150 controller).
Masterpact and Compact NS630b to 1600 circuit breakers and switch-disconnectors are compatible with the Modbus ECO COM option.
Depending on the trip units or control units used, the COM option may also be used to analyse distribution-system parameters required for the operating and maintenance assistance.

Circuit breaker communication

	Switch-disconnector	Circuit breaker
Compact NS630b-1600 status indications		
ON / OFF	■	■
Fault trip		■
Connected / disconnected position	■	■
Masterpact NT/NW status indications		
ON / OFF	■	■
Fault trip		■
Connected / disconnected position	■	■

Operating and maintenance assistance

Operating and maintenance aids	Modbus			
Measurement				
Current	A	E	P	H
Voltages, power...		E	P	H
Frequency			P	H
Power quality: fundamental, harmonics				H
Programming of demand metering		E	P	H
Fault readings				
Type of fault	A	E	P	H
Interrupted current			P	H
Waveform capture				
On faults				H
On demand or programmed				H
Histories and logs				
Trip history		E	P	H
Alarm history			P	H
Event logs			P	H
Indicators				
Counter operation	A	E	P	H
Contact wear			P	H
Maintenance register			P	H

Note: *see the description of the Micrologic control units for further details on protection and alarms, measurements, waveform capture, histories, logs and maintenance indicators.*

Controller	UA150
Status indications	
“Normal” source	
ON / OFF	■
Circuit breaker ON	■
Fault trip (SDE)	■
Voltage presence	■
“Replacement” source	
Circuit breaker ON	■
Fault trip (SDE)	■
Voltage presence	■
Status of R voltage contact	■
Controller	
Automatic mode	■
“Normal” mode	■
“Replacement” mode	■
Stop mode	■
Testing	■
“Replacement” engine generator set	
Genset failure	■
Genset OFF	■
Genset ON	■
Shedding of non-priority circuits	■
Reconnection of non-priority circuits	■
Settings	
Time delay t1 for validation of UN absence	■
Time delay t2 for validation of UN return	■
Time delay t3 for wait between opening of N and closing of R	■
Time delay t4 for wait between opening of R and closing of N	■
Time delay t5 for wait between return of UN and order for genset shutdown	■
Time delay t6 for wait before declaring genset failure	■
Penalties accepted to avoid special tariff transfer	■

DB404074.eps

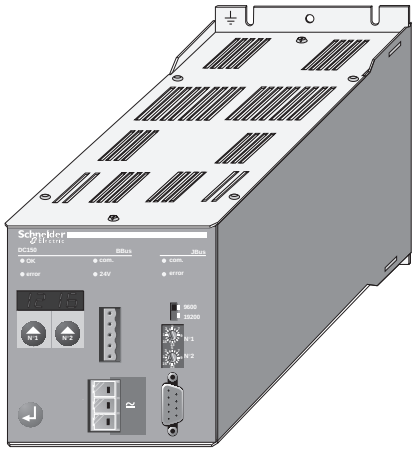

DC150 data concentrator

The DC150 data concentrator is designed to centralise the information provided by the communicating switchgear of the Digipact range and to make this information accessible to a supervisor or PLC under the MODBUS/JBUS protocol.

Main characteristics

■ Power supply:
110 V AC to 240 V AC
115 V DC to 125 V DC.
■ Weight: 1.5 kg.
■ Installation: on panel with the DC150 box which must be earthed on metal part of the installation.
■ Over dimensions H x W x D (mm): 138.5 x 100 x 192.8.

Dimensions

Presentation *2*
Functions and characteristics *A-1*

Manual source-changeover systems

Interlocking of direct rotary handles B-2
Interlocking of extended rotary handles B-3
Interlocking of toggles B-5
Complete source-changeover assembly B-6
Downstream coupling accessory B-7

Remote-operated source-changeover systems

Interlocking on a base plate B-9
Interlocking using connecting rods B-13
Interlocking using cables B-15
IVE unit, BA and UA automatic controllers B-20

Electrical diagrams *C-1*
Catalogue numbers and order forms *D-1*

Manual source-changeover systems
Interlocking of direct rotary handles

Compact NSX100 to 630

Dimensions

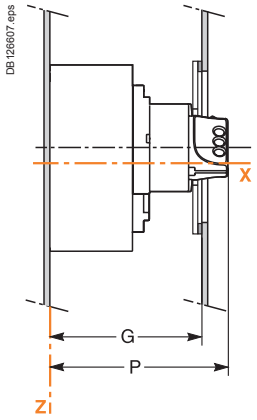

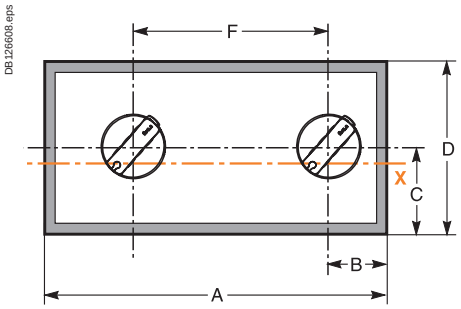

Front-panel cutout

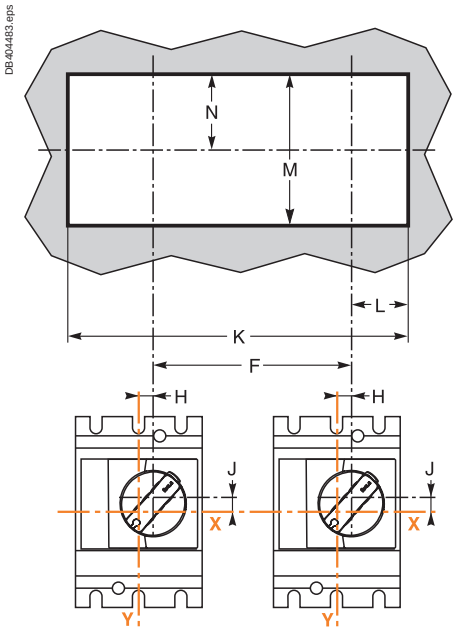

Dimensions (mm)

	A	B	C	D	F	G	H	J	K	L	M	N	P
NSX100/160/250	325	90	87.5	175	156	133	9.25	9	295	75.5	150	75	155
NSX400/630	416	115	100	200	210	157	5	24.6	386	100	175	74.5	179

Compact INS/INV250 - 100 to 250 / Compact INS/INV320/400/500/630

Dimensions

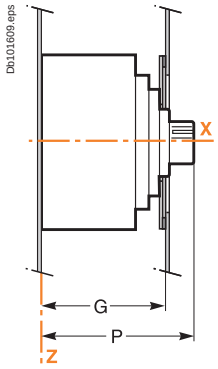

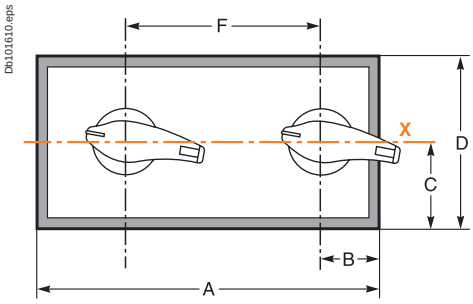

Front-panel cutout

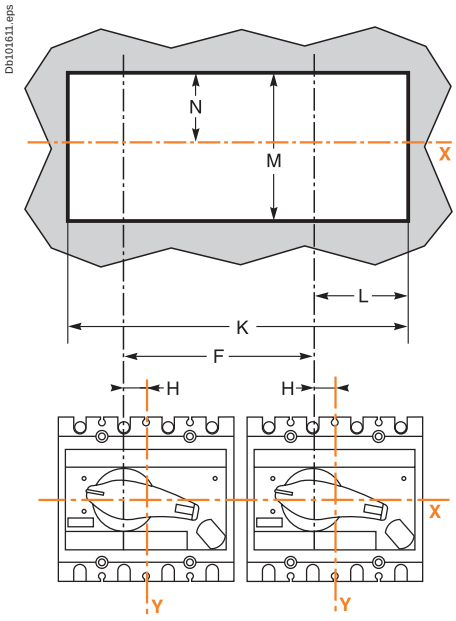

Dimensions (mm)

Type	A	B	C	D	F	G	H	K	L	M	N	P
INS/INV250 - 100/160/200/250	325	90	87.5	175	156	106	17.5	295	75.5	150	75	131
INS/INV320/400/500/630	416	115	100	200	210	130	22.5	386	100	175	74.5	160.4

Note: X and Y are the symmetry planes for a 3-pole device.

Compact NSX100 to 630

Dimensions

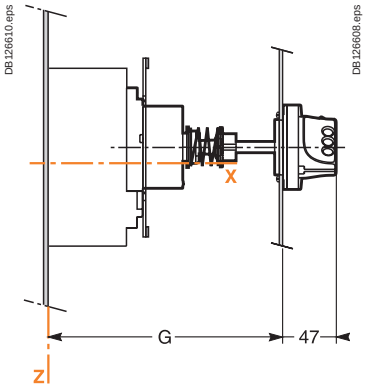

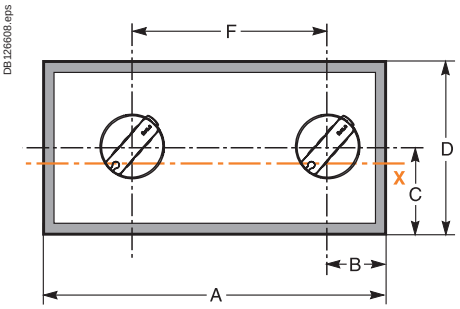

Front-panel cutout

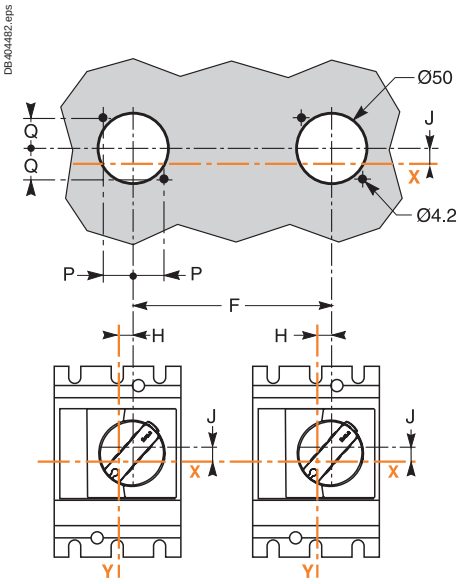

Dimensions (mm)

Type	A	B	C	D	F	G min	G max	H	J	P	Q
NSX100/160/250	325	90	87.5	175	156	171	600	9.25	9	25.5	25.5
NSX400/630	416	115	100	200	210	195	600	5	24.6	30.8	30.8

Compact INS40/63/80/100/125/160 / Compact INS/INV250 - 100 to 250 / Compact INS/INV320/400/500/630

Dimensions

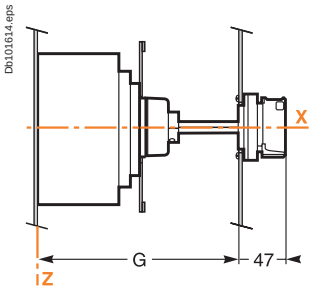

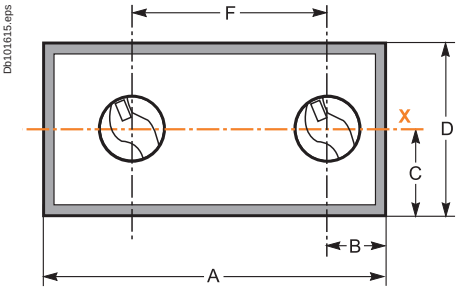

Front-panel cutout

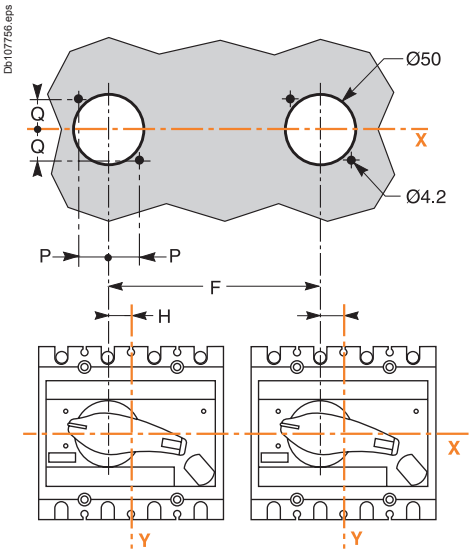

Dimensions (mm)

Type	A	B	C	D	F	G min	G max	H	P	Q
INS40/63/80	325	90	87.5	175	156	155	396	0	25.5	25.5
INS100/125/160	325	90	87.5	175	156	200	441	0	25.5	25.5
INS/INV250 - 100/160/200/250	325	90	87.5	175	156	185	600	17.5	25.5	25.5
INS320/400/500/630	416	115	100	200	210	204	600	22.5	30.8	30.8

Manual source-changeover systems

Interlocking of extended rotary handles

Compact NS630b to 1600

Dimensions

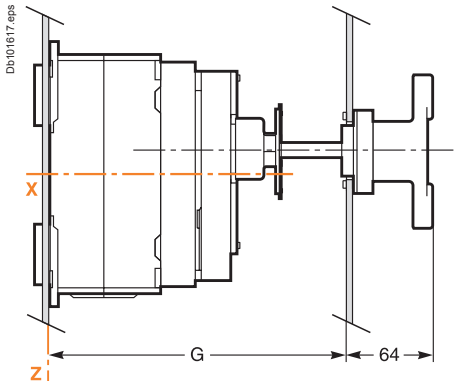

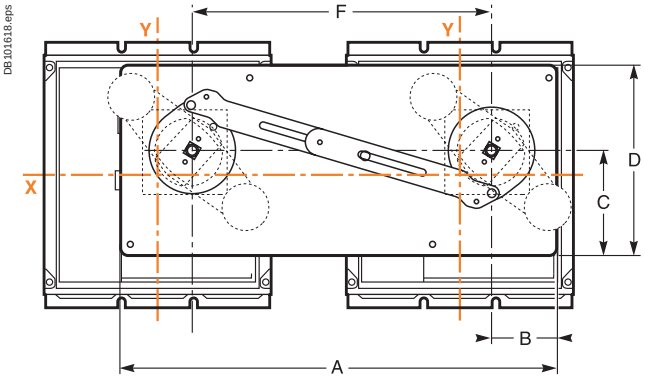

Front-panel cutout

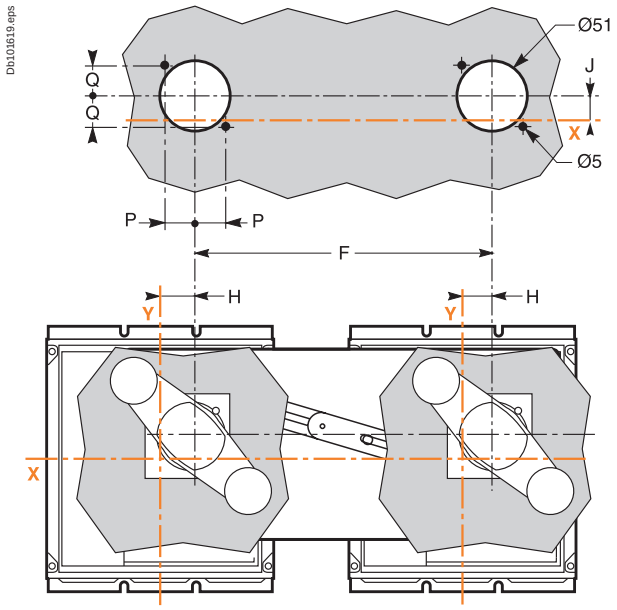

Dimensions (mm)

Type	A	B	C	D	F	G min	G max	H	J	P	Q	R
NS630b/800/1000/1200/1600	411	63.5	98	175	280	218	605	25	24	25.5	25.5	64

Compact NSX100 to 630

Dimensions

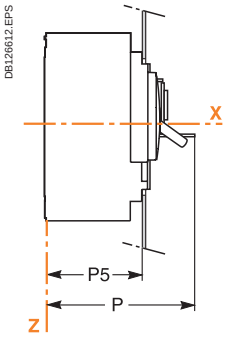

3 poles

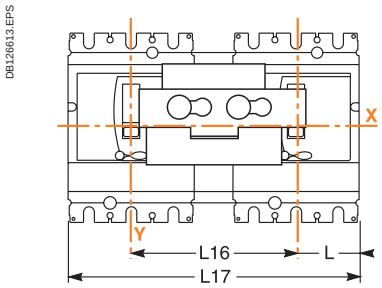

4 poles

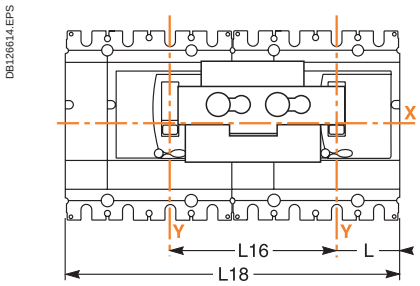

Front-panel cutout

3 poles on left

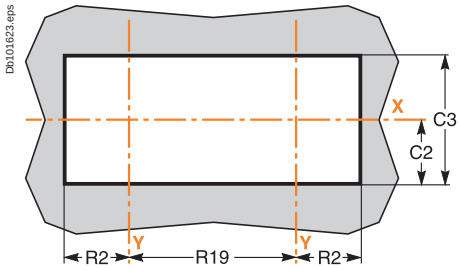

4 poles on left

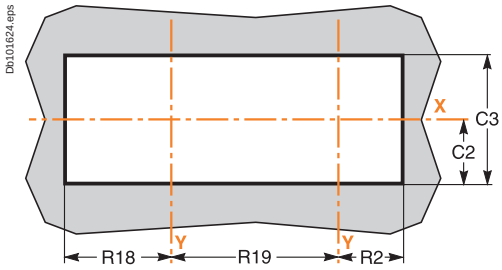

Dimensions (mm)

Type	C2	C3	L	L16	L17	L18	R2	R18	R19	P5	P
NSX100/160/250	54	108	52.5	140	245	280	54	89	140	83	120
NSX400/630	92.5	182	70	185	325	370	71.5	116.5	185	107	150

Manual source-changeover systems

Complete source-changeover assembly

Assembly for INS250 - 100 to 250 / Assembly for INS320/400/500/630

Dimensions

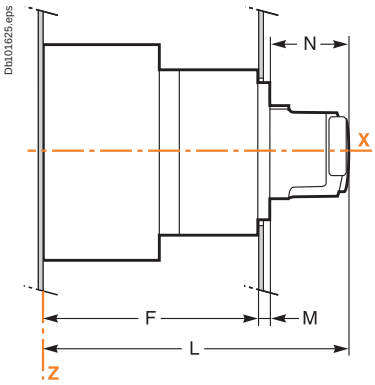

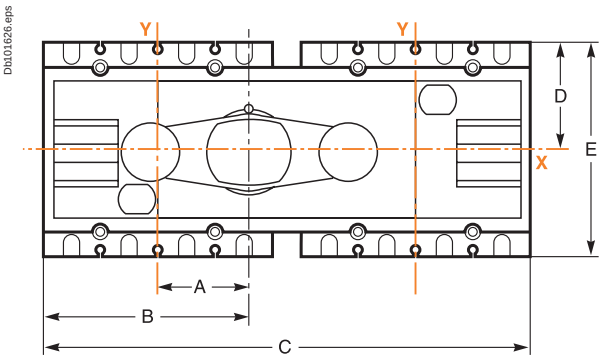

Front-panel cutout

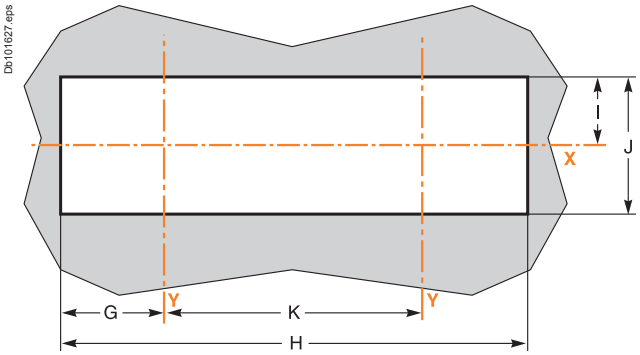

Dimensions (mm)

Type	A	B	C	D	E	F	G	H	I	J	K	L	M	N
INS250 - 100/160/200/250	60.4	130.4	296	68	136	131	61.8	279.3	42	84	156	186.5	5.5	50
INS320/400/500/630	82.5	175	395	102.5	205	155	87	383.7	64	128	210	213	8	50

Dimensions of the complete source-changeover assembly with an extended handle

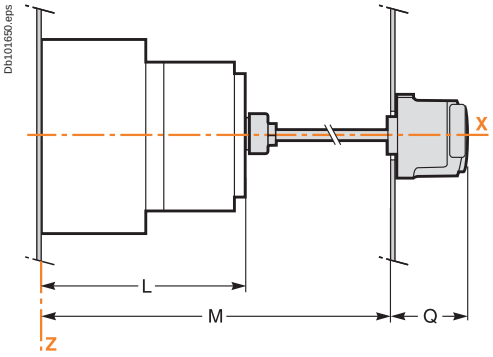

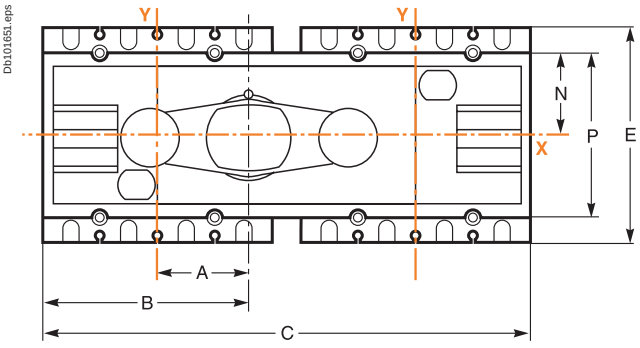

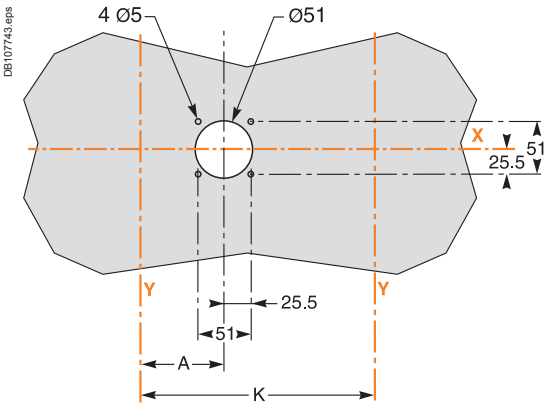

Dimensions (mm)

Type	A	B	C	E	K	L	M	N
INS250 - 100/160/200/250	60.4	130.4	295	136	156	138.5	631	50
INS320/400/500/630	82.5	175	395	205	210	162.5	658	75

Dimensions (mm)

Type	P	Mmax	Mmin	Q
INS250 - 100/160/200/250	100	567.5	195	64
INS320/400/500/630	150	593	220.5	64

Note: lines X and Y indicate the axes of symmetry of the switch-disconnector. Reference plane Z corresponds to the back of the switch-disconnector.

Compact NSX100 to NSX630 (only for Compact NSX fixed devices)

Dimensions

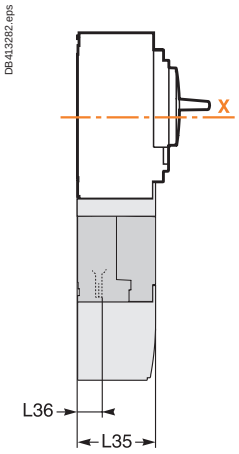

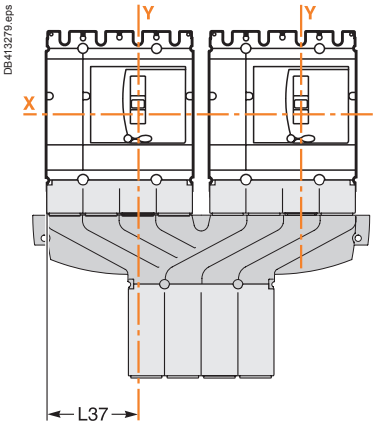

Dimensions

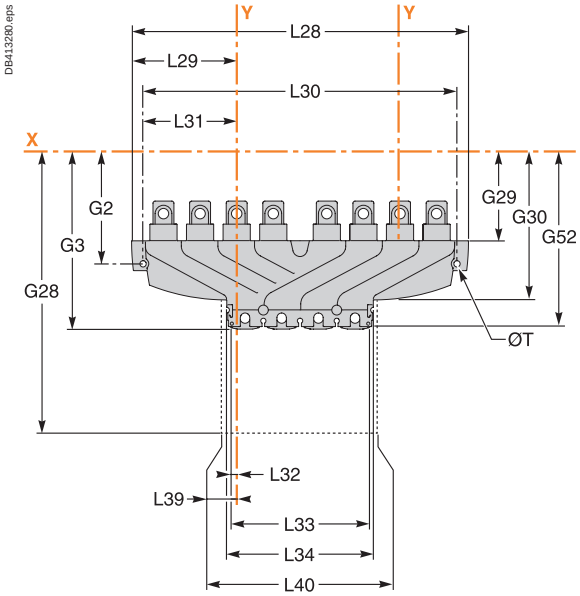

Connection

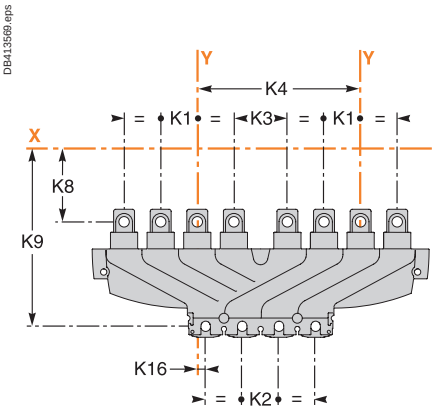

Dimensions (mm)

Type	G2	G3	G28	G29	G30	G52	K1	K2	K3	K4	K8	K9	K16
NSX100/160/250	118	181.5	244.5	96	152.5	178	35	35	51	156	70	170	8
NSX400/630	165.9	264.7	337.5	143.5	220.5	264.7	45	45	75	210	113.5	250.7	15

Dimensions (mm)

Type	L28	L29	L30	L31	L32	L33	L34	L35	L36	L37	L39	L40	ØT
NSX100/160/250	320	99.5	300	89.5	4.73	130.5	139.5	74.5	19.5	87.5	9.5	140	6
NSX400/630	425	130	400	117.5	5.15	175.3	184.7	98.5	26	115	9.85	184.7	6

Note: coupling accessory: only for changeover systems using fixed versions of Compact NSX circuit breakers.

Manual source-changeover systems

Downstream coupling accessory

Compact INS250 - 100 to 250 / Compact INS320/400/500/630

Dimensions

DB413286.eps

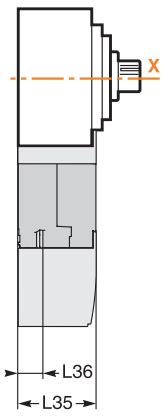

DB413283.eps

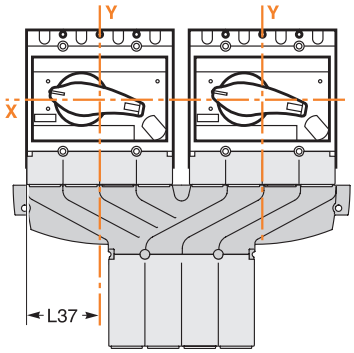

DB413567.eps

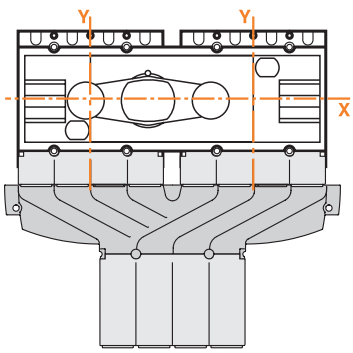

Dimensions

DB413284.eps

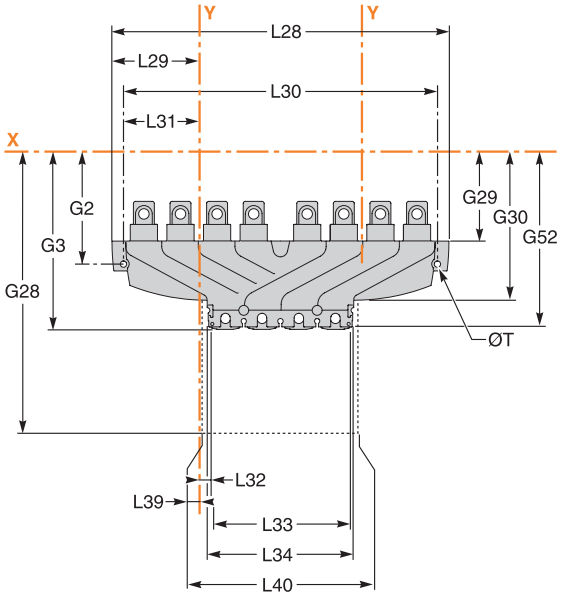

Connection

DB413570.eps

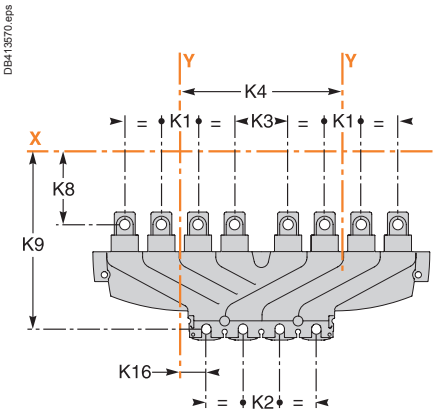

Dimensions (mm)

Type	G2	G3	G28	G29	G30	G52	K1	K2	K3	K4	K8	K9	K16
INS250-100/160/200/250	105.5	169	232	83.5	140	165.5	35	35	51	156	57.5	157.5	25.5
INS320/400/500/630	141	240.7	313	119	195.6	240	45	45	75	210	88.5	225.7	37.5

Dimensions (mm)

Type	L28	L29	L30	L31	L32	L33	L34	L35	L36	L37	L39	L40	ØT
INS250-100/160/200/250	320	83	300	72	12.8	130.5	139.5	74.5	21.5	70	8.5	140	6
INS320/400/500/630	425	107.5	400	95	17.35	175.3	184.7	98.5	26	92.5	12.65	184.7	6

Compact NSX100 to 250

Dimensions, 3 or 4 poles

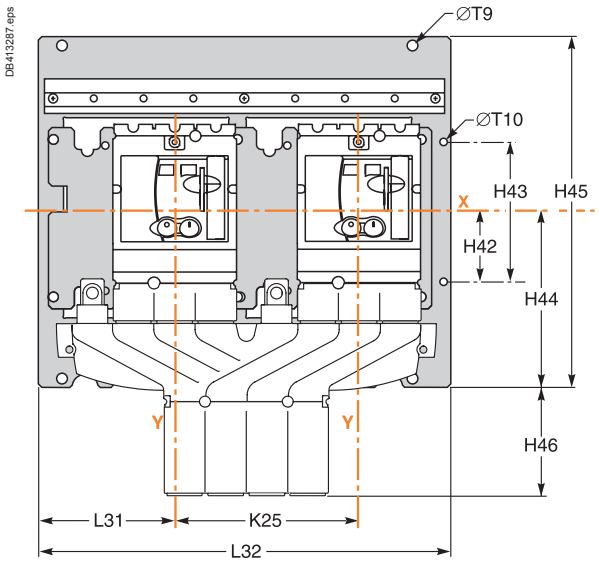

Fixed device

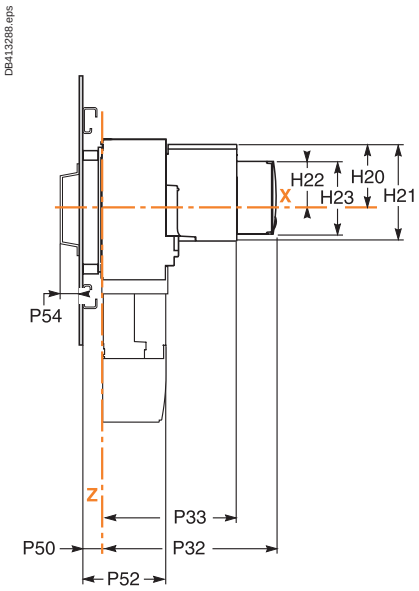

Withdrawable device

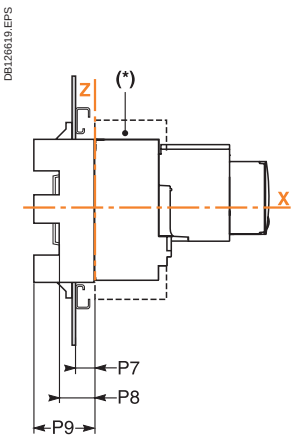

(*) Short terminal shields are mandatory.

Vertical mounting

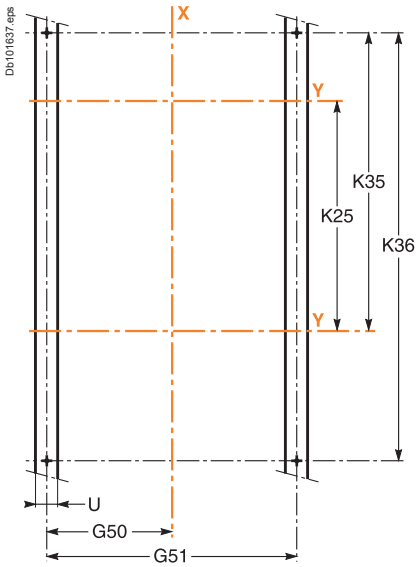

Horizontal mounting

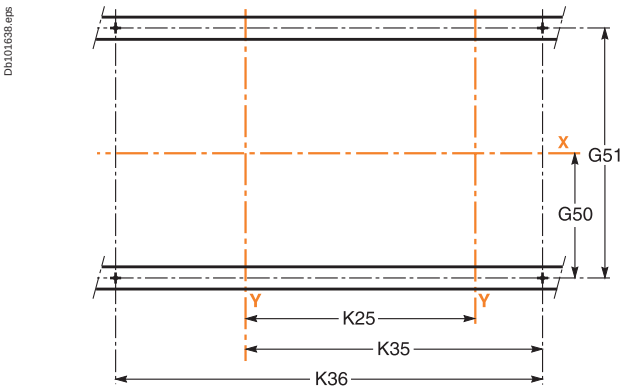

Dimensions (mm)

Type	G50	G51	H20	H21	H22	H23	H42	H43	H44	H45	H46	K25	K35	K36
NSX100/160/250	137.5	285	62.5	97	45.5	73	60	120	144.5	300	37	156	210.5	300
NSX400/630	180	360	100	152	83	123	60	120	189	378	77	210	282.5	400

Dimensions (mm)

Type	L31	L32	P7	P8	P9	P32	P33	P50	P52	P54	ØT9	ØT10	U
NSX100/160/250	110.5	354	25	45	75	182	143	25	99.5	21	9	6	⩽ 32
NSX400/630	150.5	466	25	45	100	256	215	25	123	21	9	6	⩽ 32

Note: *coupling accessory: only for changeover systems using fixed versions of Compact NSX circuit breakers.*

Remote-operated source-changeover systems
Interlocking on a base plate

Compact NSX400 to 630

Dimensions, 3 or 4 poles

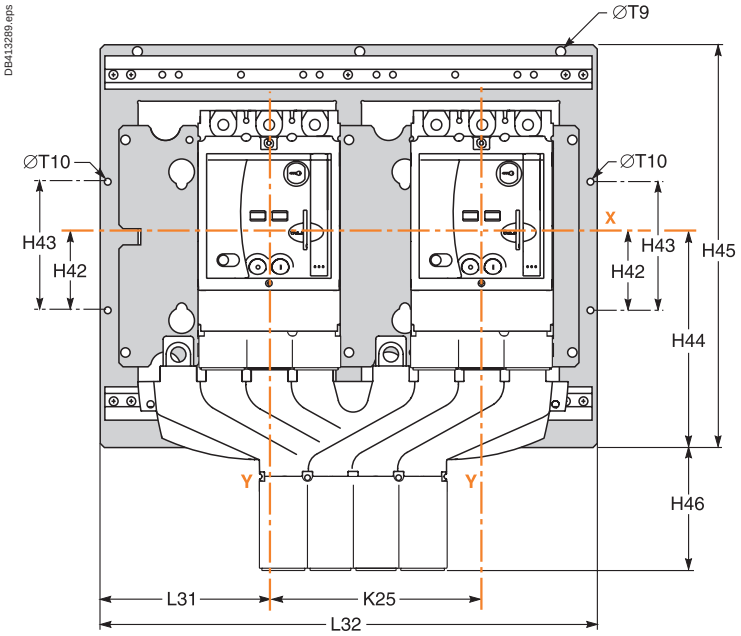

Fixed device

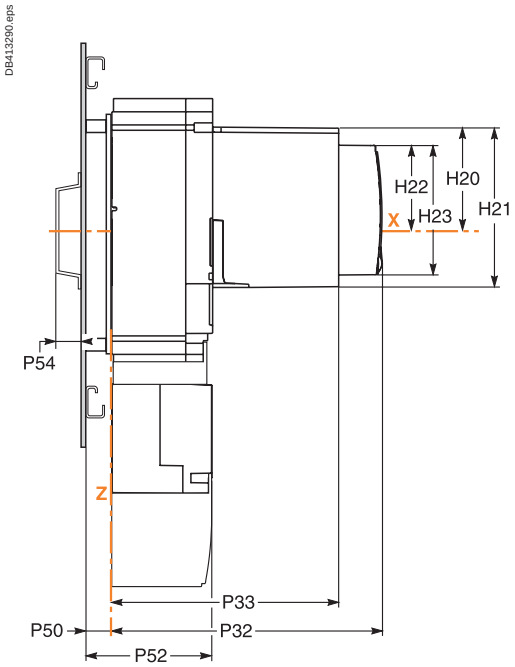

Withdrawable device

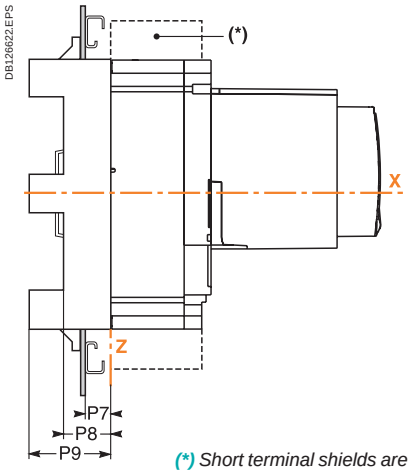

Note: coupling accessory: only for changeover systems using fixed versions of Compact NSX circuit breakers.

(*) Short terminal shields are mandatory.

Dimensions

Vertical mounting

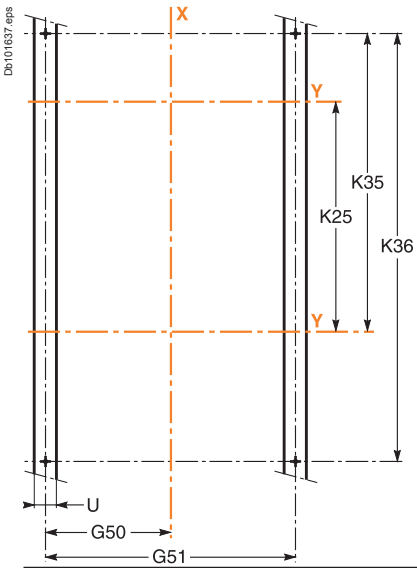

Horizontal mounting

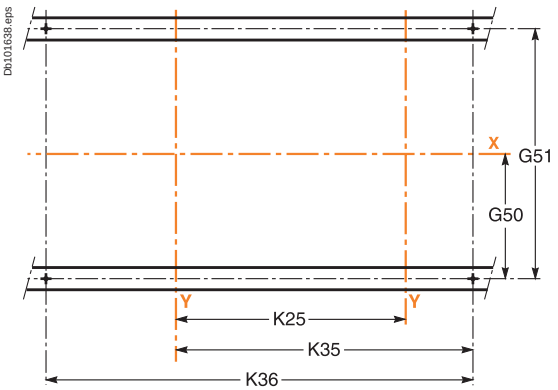

Note: dimensions see page B-9.

“Normal” and “Replacement” source devices: NSX100 to NSX250

Dimensions

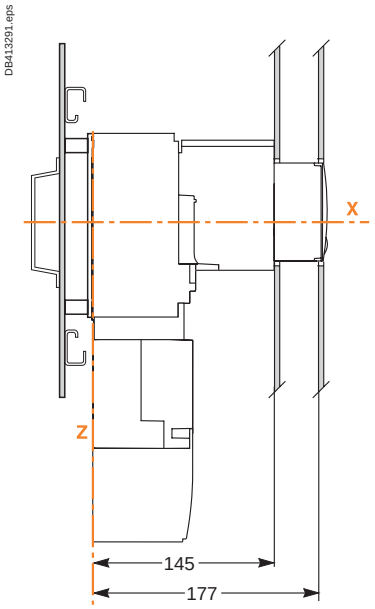

Front-panel cutout

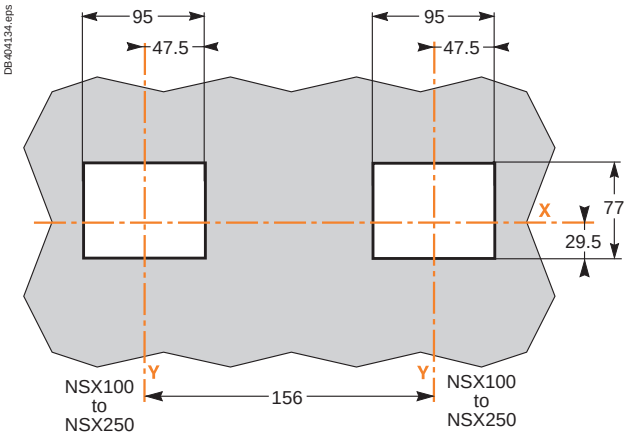

“Normal” and “Replacement” source devices: NSX400 to NSX630

Dimensions

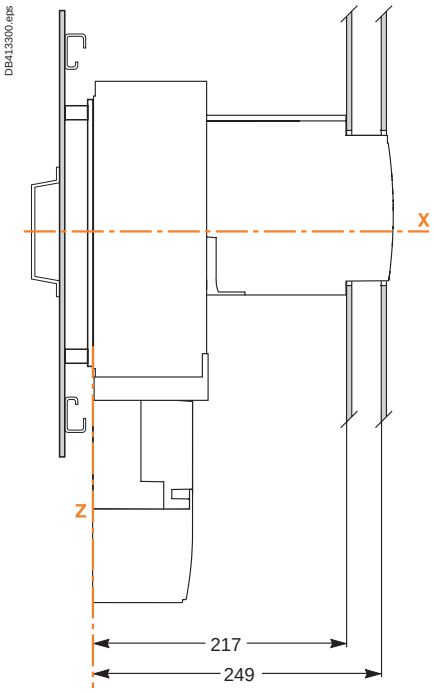

Front-panel cutout

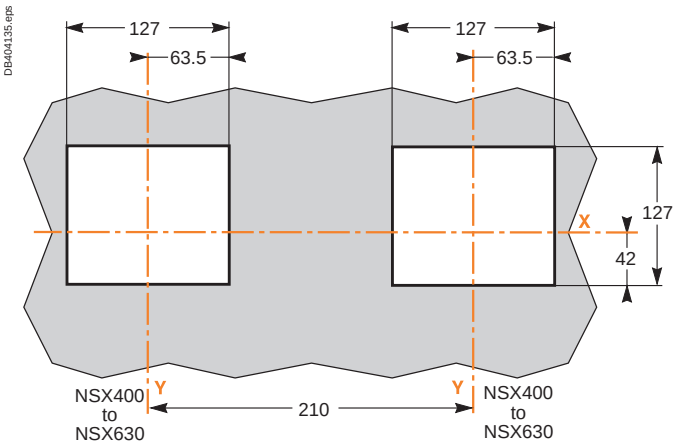

Note for Compact NSX:
For dimensions with the accessories (IP40 escutcheons and Vigi escutcheon protection collars), see Catalogue Compact.

Remote-operated source-changeover systems
Interlocking on a base plate

NSX400 to NSX630 as the “Normal” device, NSX100 to NSX250 as the “Replacement” device

Dimensions

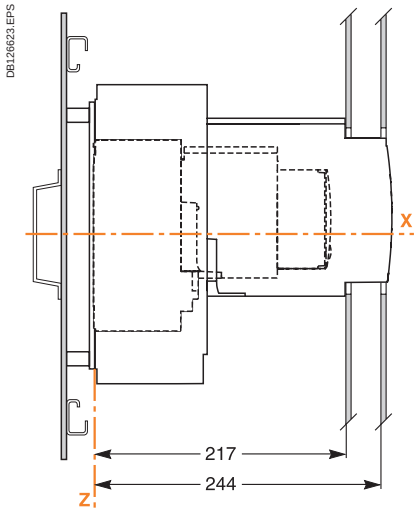

Front-panel cutout

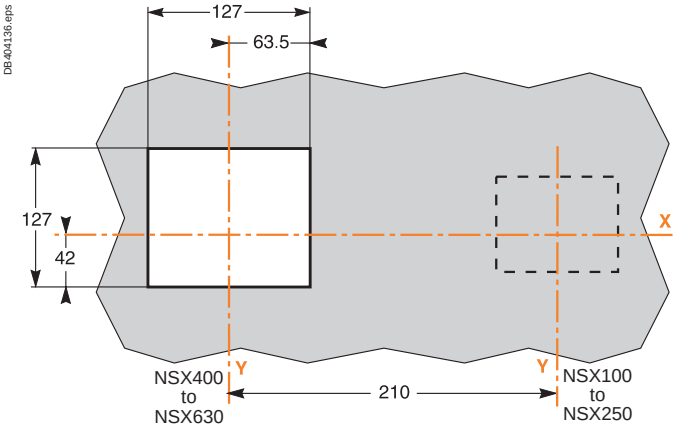

Two Compact NS630b to NS1600 devices one above the other

Fixed devices

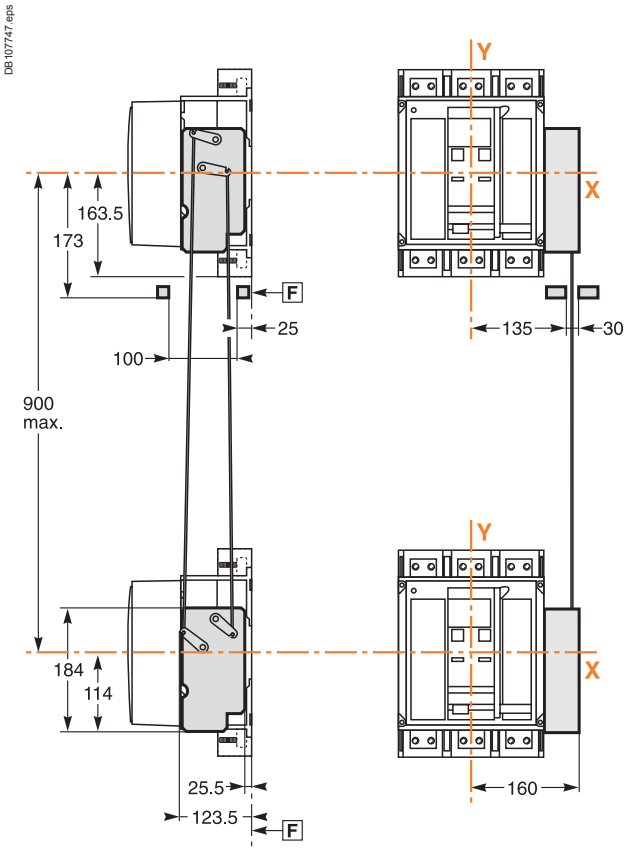

Withdrawable devices

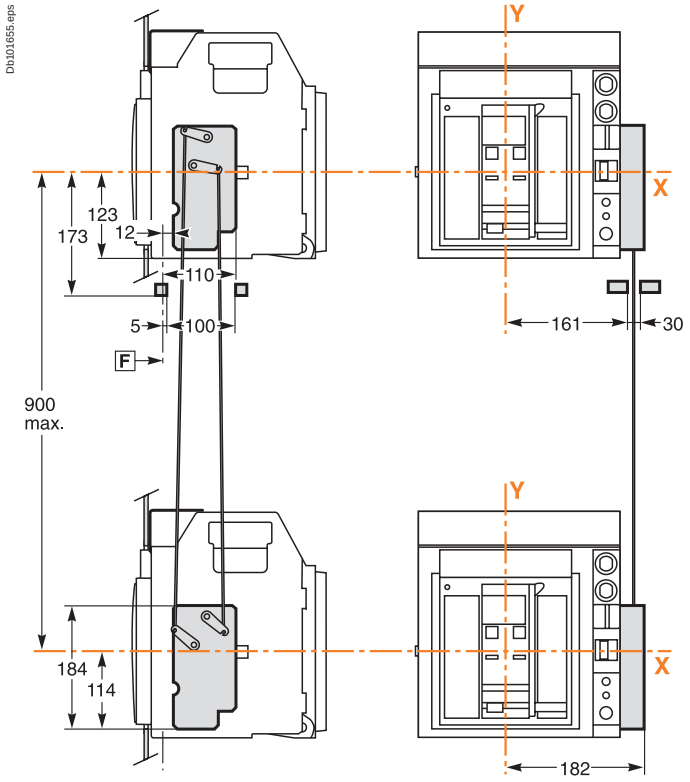

Two Masterpact NT devices one above the other

Fixed devices

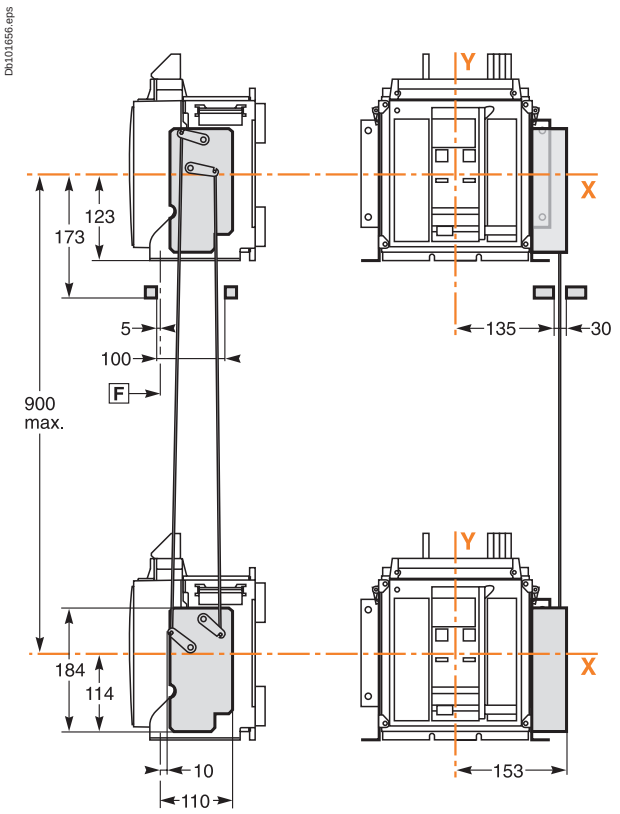

Withdrawable devices

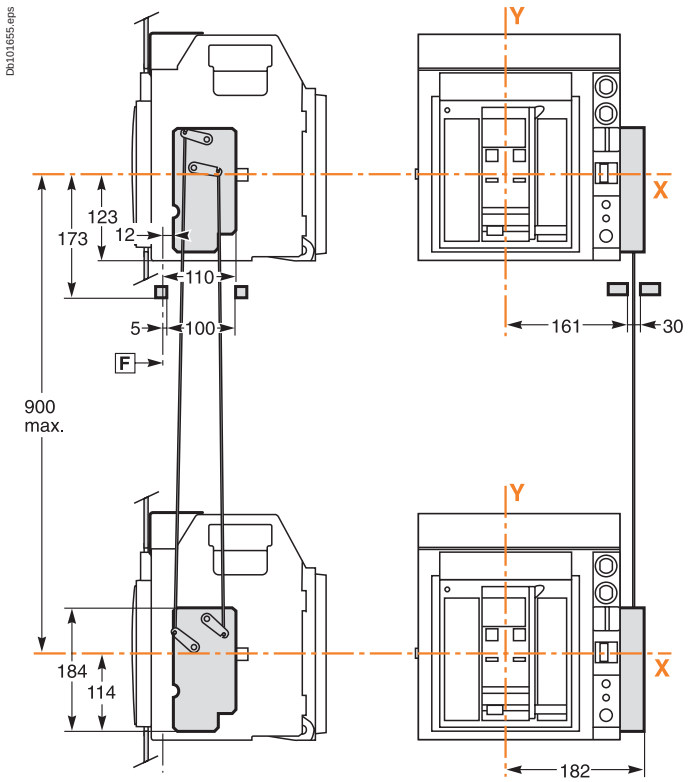

Remote-operated source-changeover systems
Interlocking using connecting rods

Two Masterpact NW devices one above the other

Fixed devices

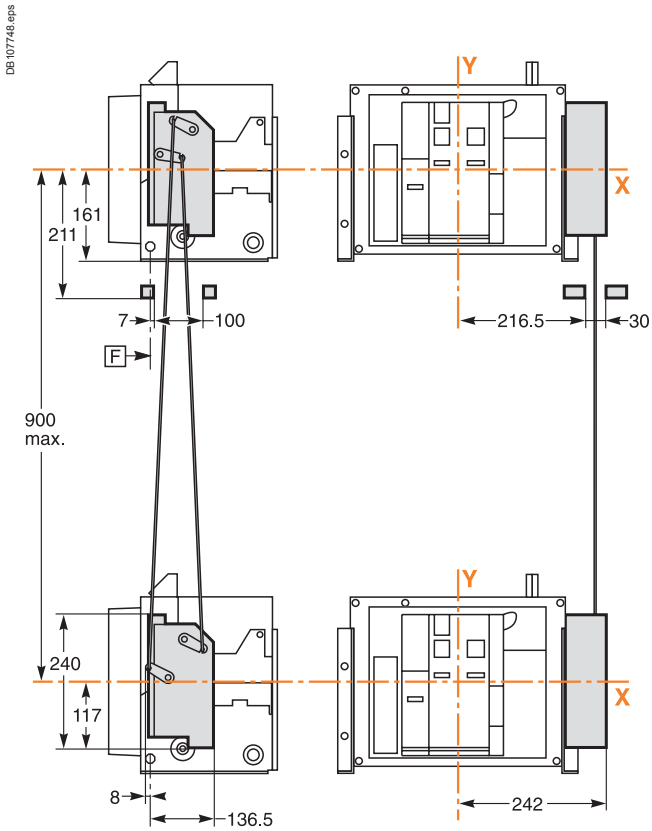

Withdrawable devices

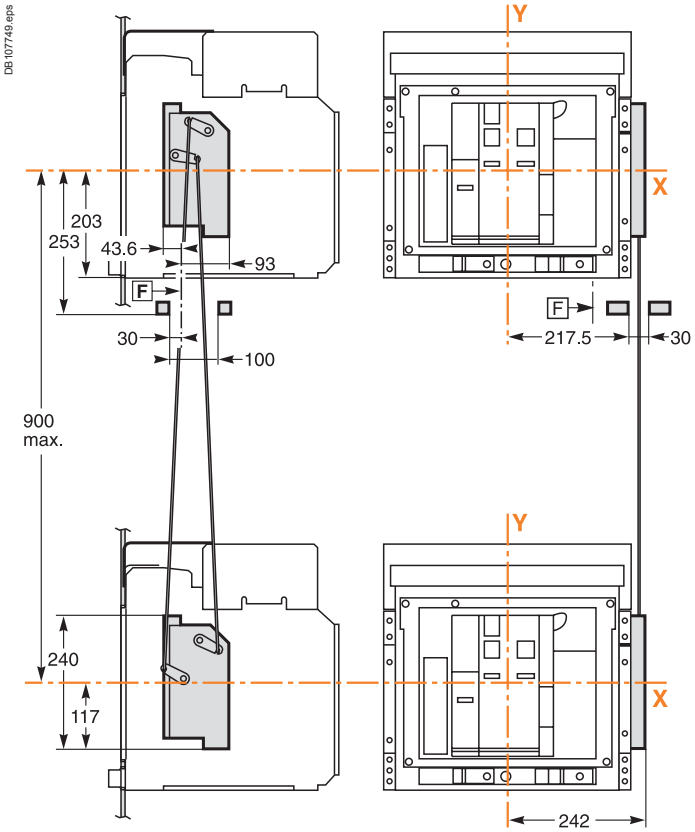

Interlocking using cables

Two Compact NS630b to NS1600 devices side-by-side

Fixed devices

Db101661.eps

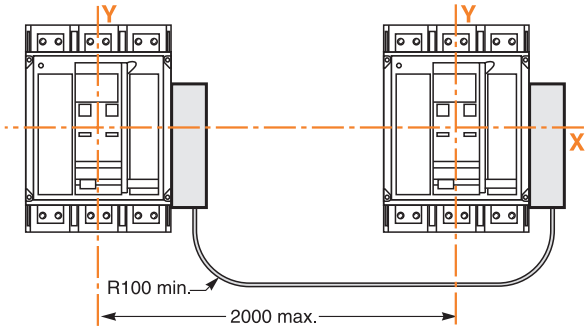

Withdrawable devices

Db101662.eps

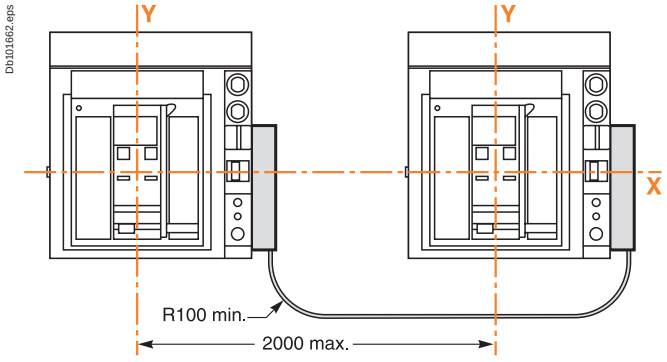

Two Masterpact NT devices side-by-side

Fixed devices

Db101663.eps

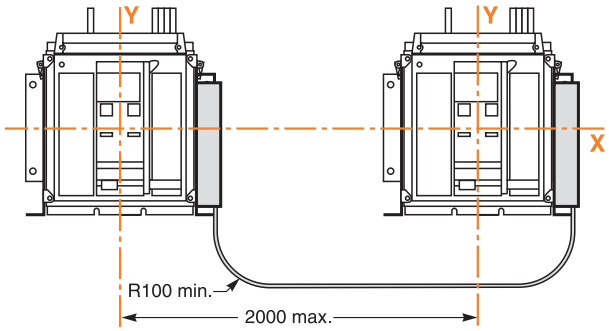

Drawout devices

Db101662.eps

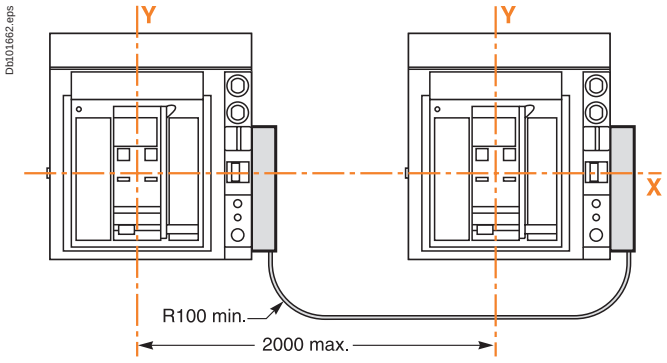

Combination of two Masterpact NT and NW devices side-by-side

Fixed devices

Db101664.eps

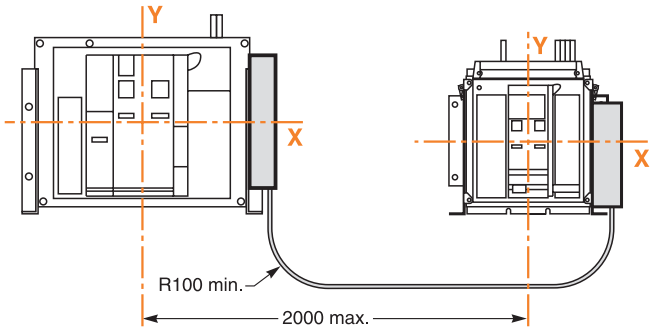

Drawout devices

DB404147.eps

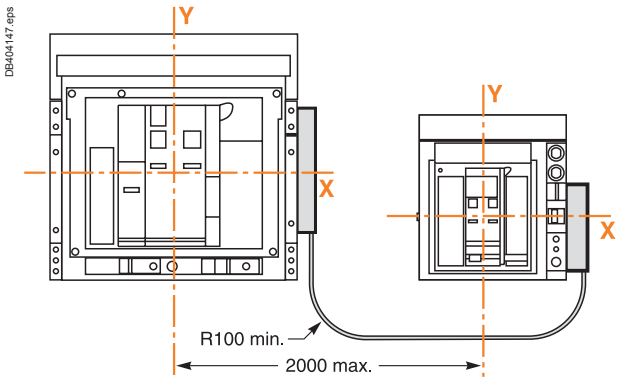

Remote-operated source-changeover systems
Interlocking using cables

Two Masterpact NW devices side-by-side

Fixed devices

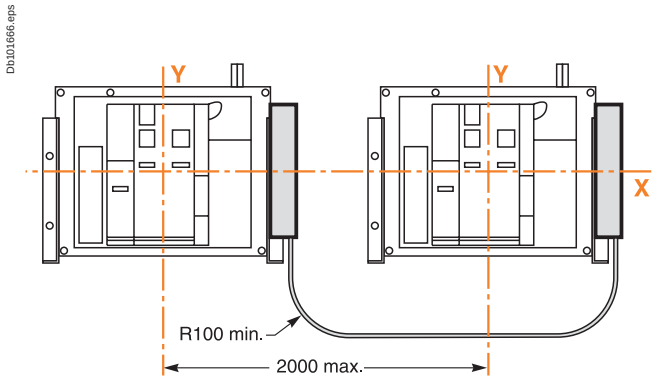

Drawout devices

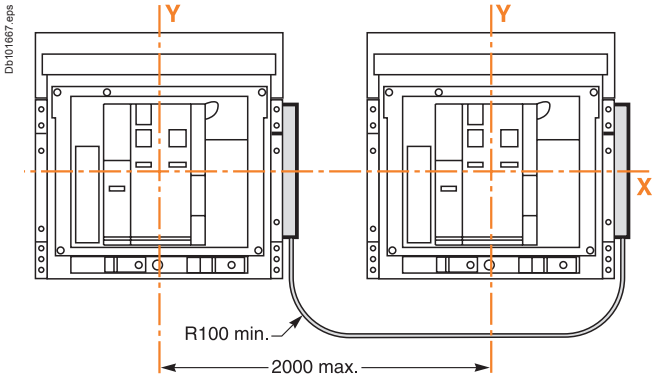

Three Masterpact NW devices side-by-side

Fixed devices

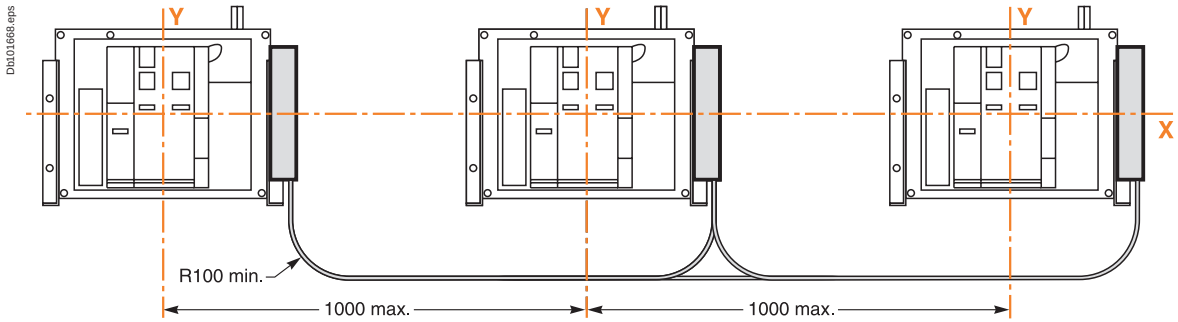

Drawout devices

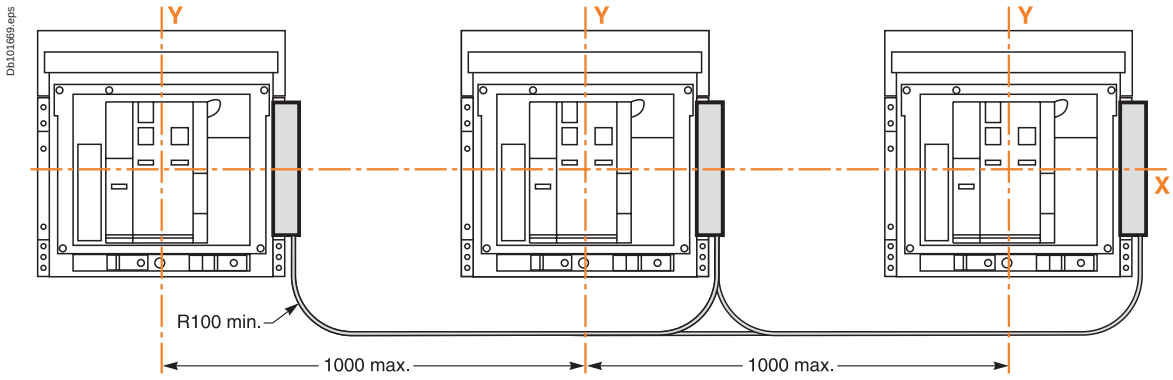

Two Compact NS630b to NS1600 devices one above the other

Fixed devices

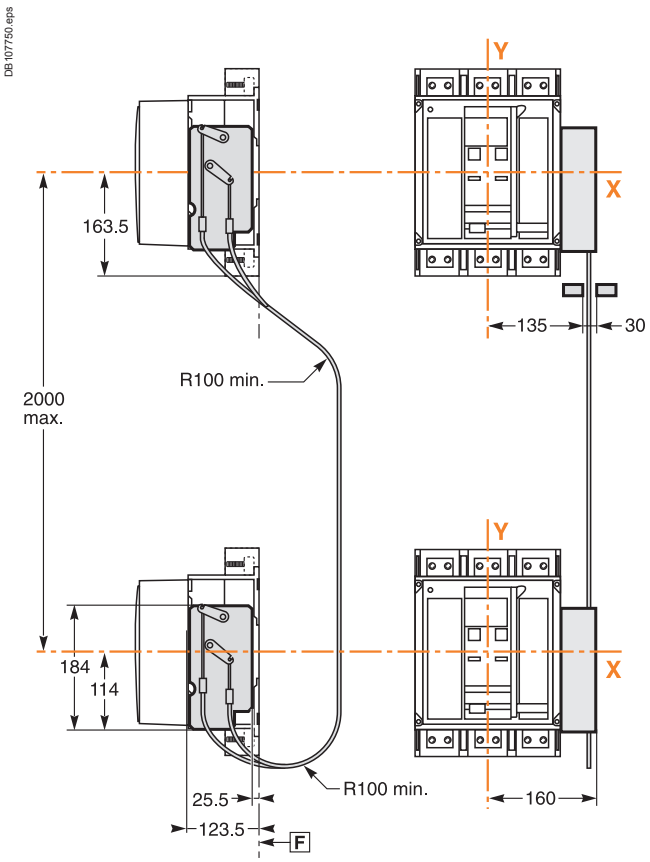

Withdrawable devices

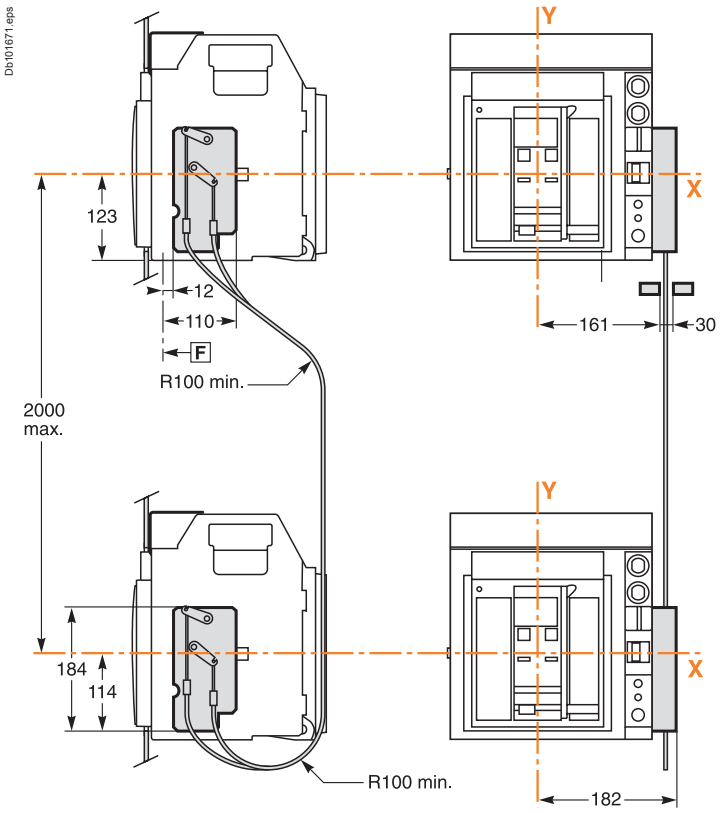

Two Masterpact NT devices one above the other

Fixed devices

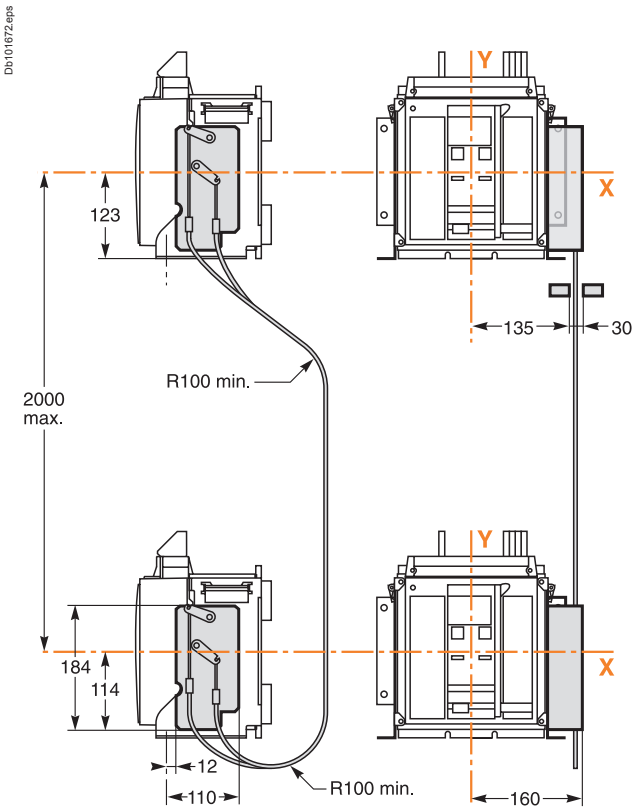

Drawout devices

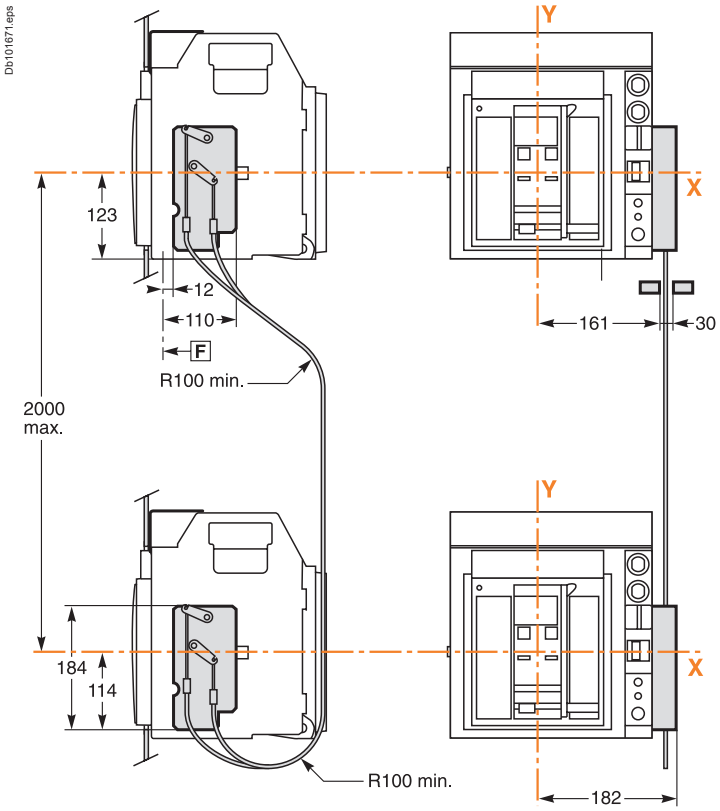

Remote-operated source-changeover systems
Interlocking using cables

Two Masterpact NW devices one above the other

Fixed devices

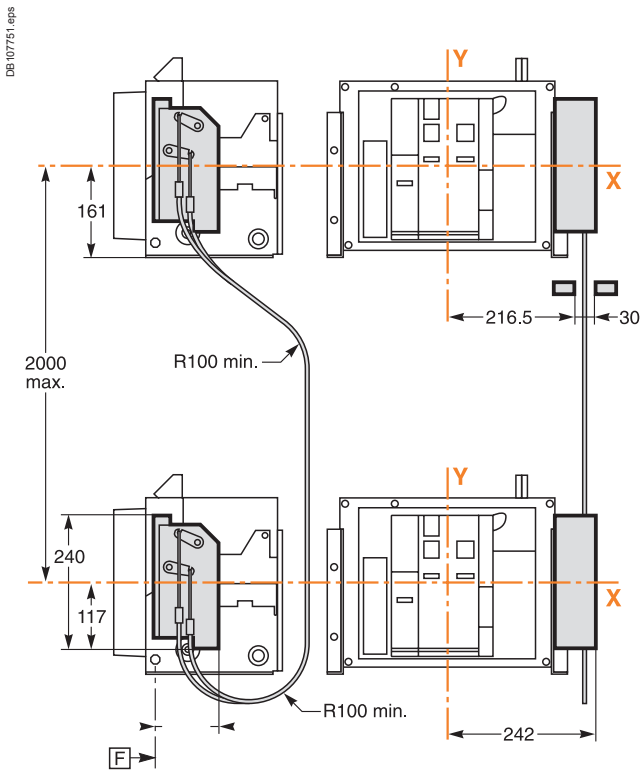

Drawout devices

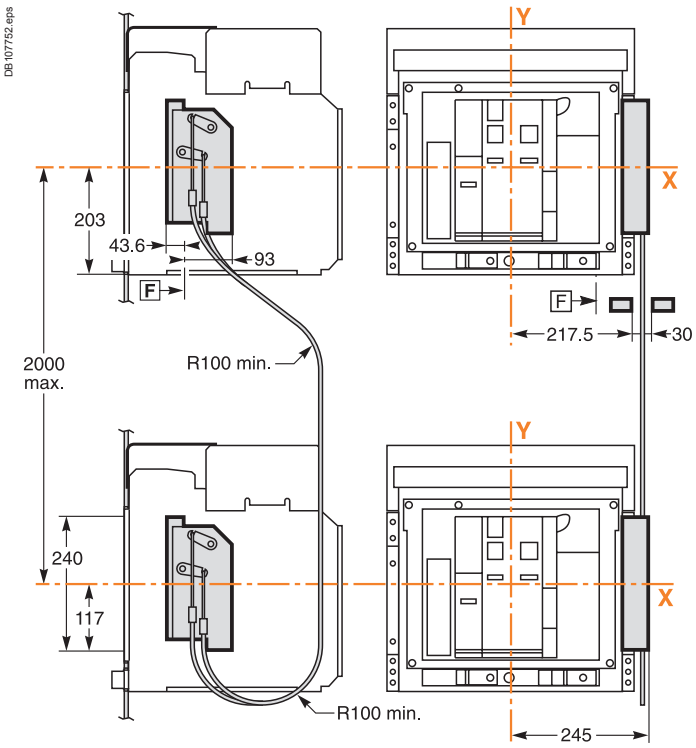

Two Masterpact NT and NW devices one above the other

Fixed devices

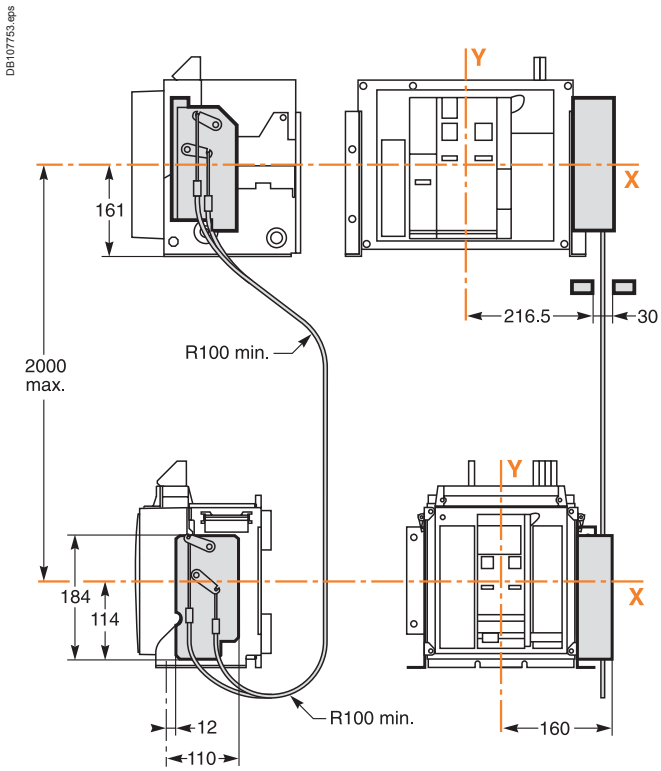

Drawout devices

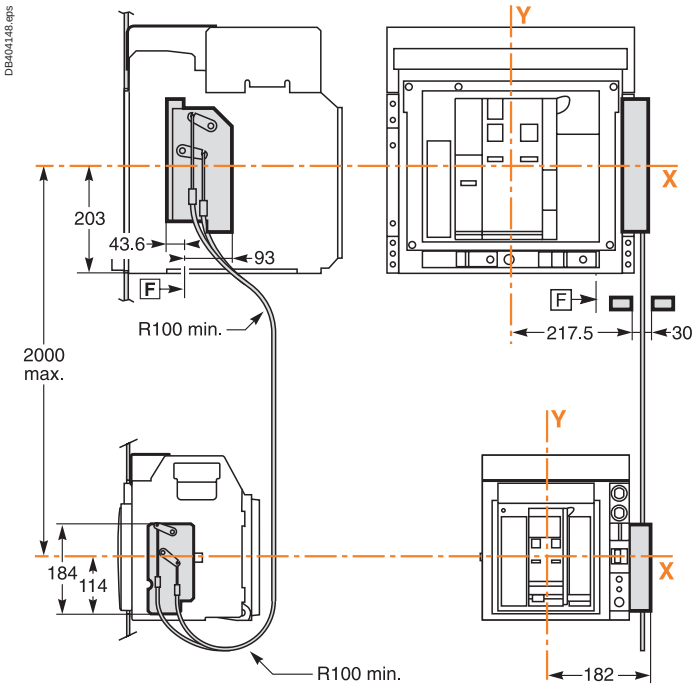

Remote-operated source-changeover systems
Interlocking using cables

Three Masterpact NW devices one above the other

Fixed devices

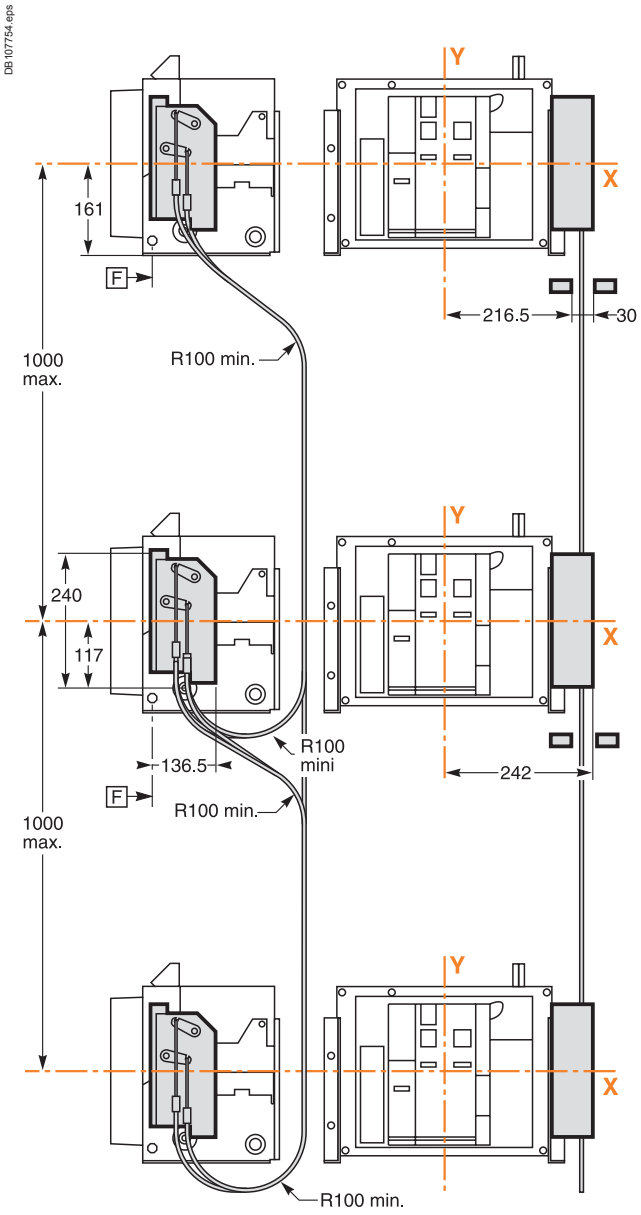

Drawout devices

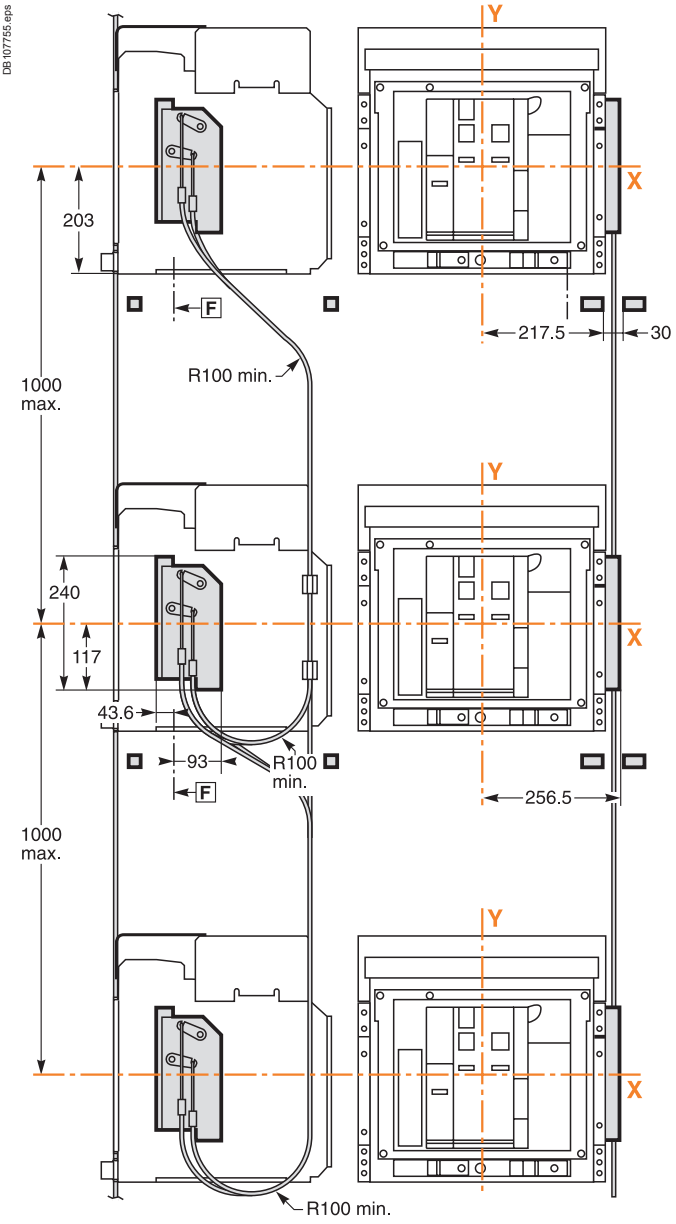

Remote-operated source-changeover systems

IVE unit, BA and UA automatic controllers

IVE unit

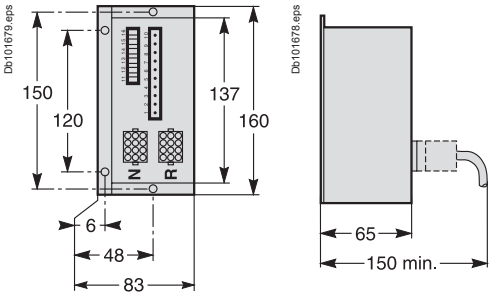

ACP control plate and BA/UA controllers

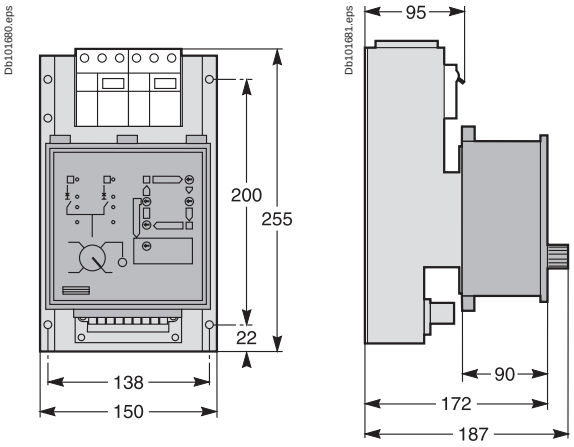

Door cutout for BA/UA controllers

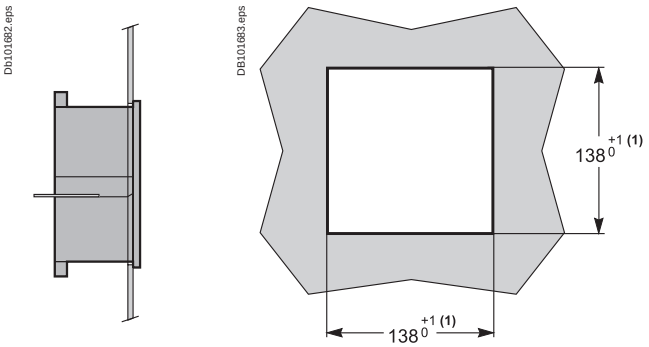

(1) Cutout according DIN 43700 standard.

Electrical diagrams

Presentation *2*
Functions and characteristics *A-1*
Dimensions *B-1*

Remote-operated source-changeover systems
2 Compact NSX100/630 devices C-2
2 Compact NSX100/630, NS630b/1600 or Masterpact NT/NW devices C-5

Source-changeover systems with automatic controllers
2 Compact NSX100/630, NS630b/1600 or Masterpact NT/NW devices C-6
Controller settings C-7
2 Compact NSX100/630, NS630b/1600 or Masterpact NT/NW devices C-8

Remote-operated source-changeover systems
2 Compact NS630b/1600 devices C-9
2 Masterpact NT or NW devices C-12
3 Masterpact NW devices C-17

Source-changeover systems with automatic controllers
2 Masterpact NT or NW devices C-26

Catalogue numbers and order forms *D-1*

Remote-operated source-changeover systems

2 Compact NSX100/630 devices

Diagram no. 51201177

Source-changeover system without automatic-control system

Without auxiliaries for emergency off

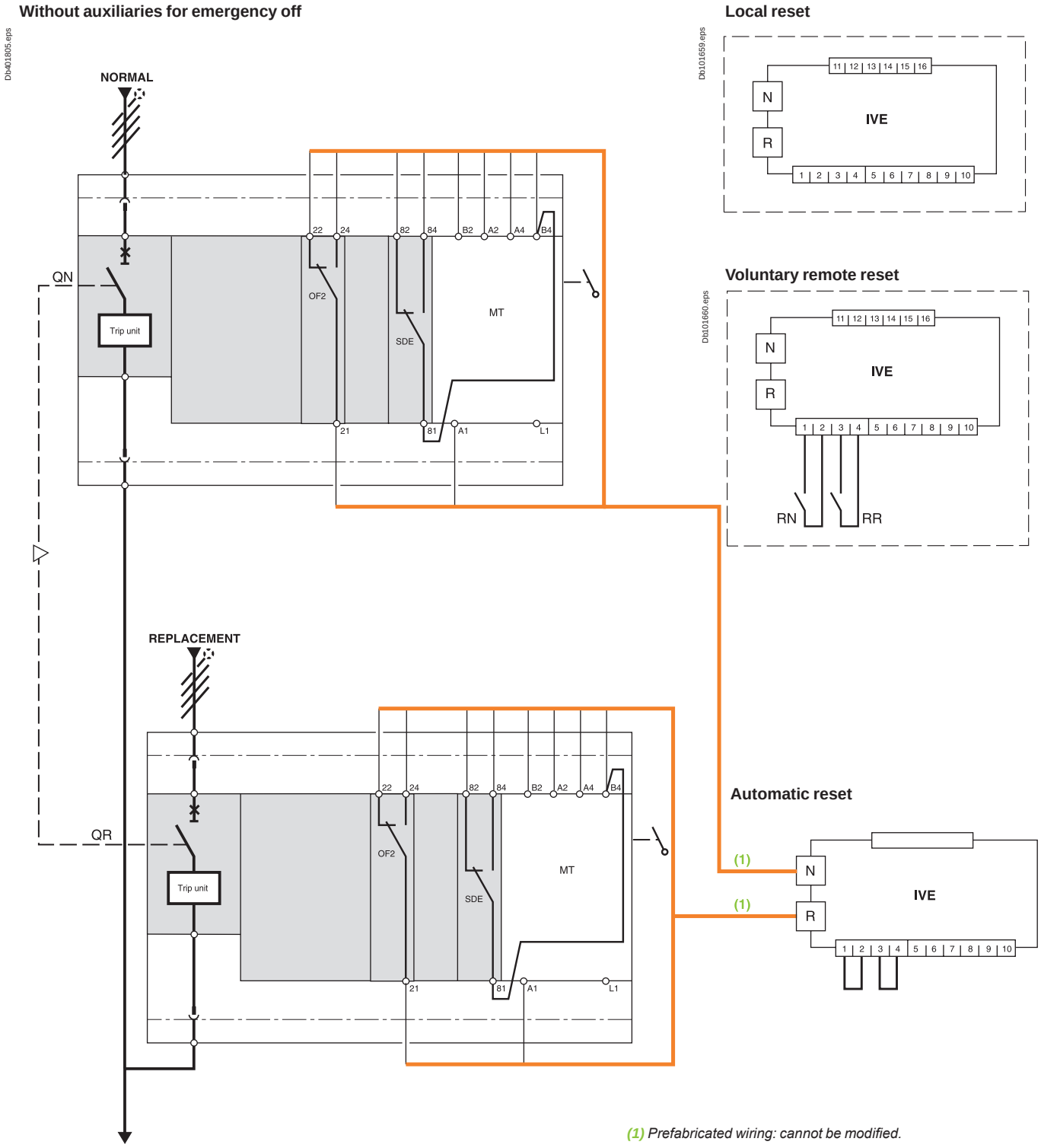

(1) Prefabricated wiring: cannot be modified.

Legends

QN	*"Normal" source Compact NSX equipped with motor mechanism*
QR	*"Replacement" source Compact NSX equipped with motor mechanism*
SDE	*"fault-trip" indication contact*
IVE	*electrical interlocking and terminal block unit*
MT	*motor mechanism*
OF2	*breaker ON/OFF indication contact*
RN	*reset order for breaker QN*
RR	*reset order for breaker QR*

States permitted by mechanical interlocking system

Normal	Replacement
0	0
1	0
0	1

Note: *diagram shown with circuits de-energised, circuit breakers open and relays in normal position.*

Remote-operated source-changeover systems

2 Compact NSX100/630 devices

Diagram no. 51201178

Source-changeover system without automatic-control system

With emergency off by MN release and automatic reset

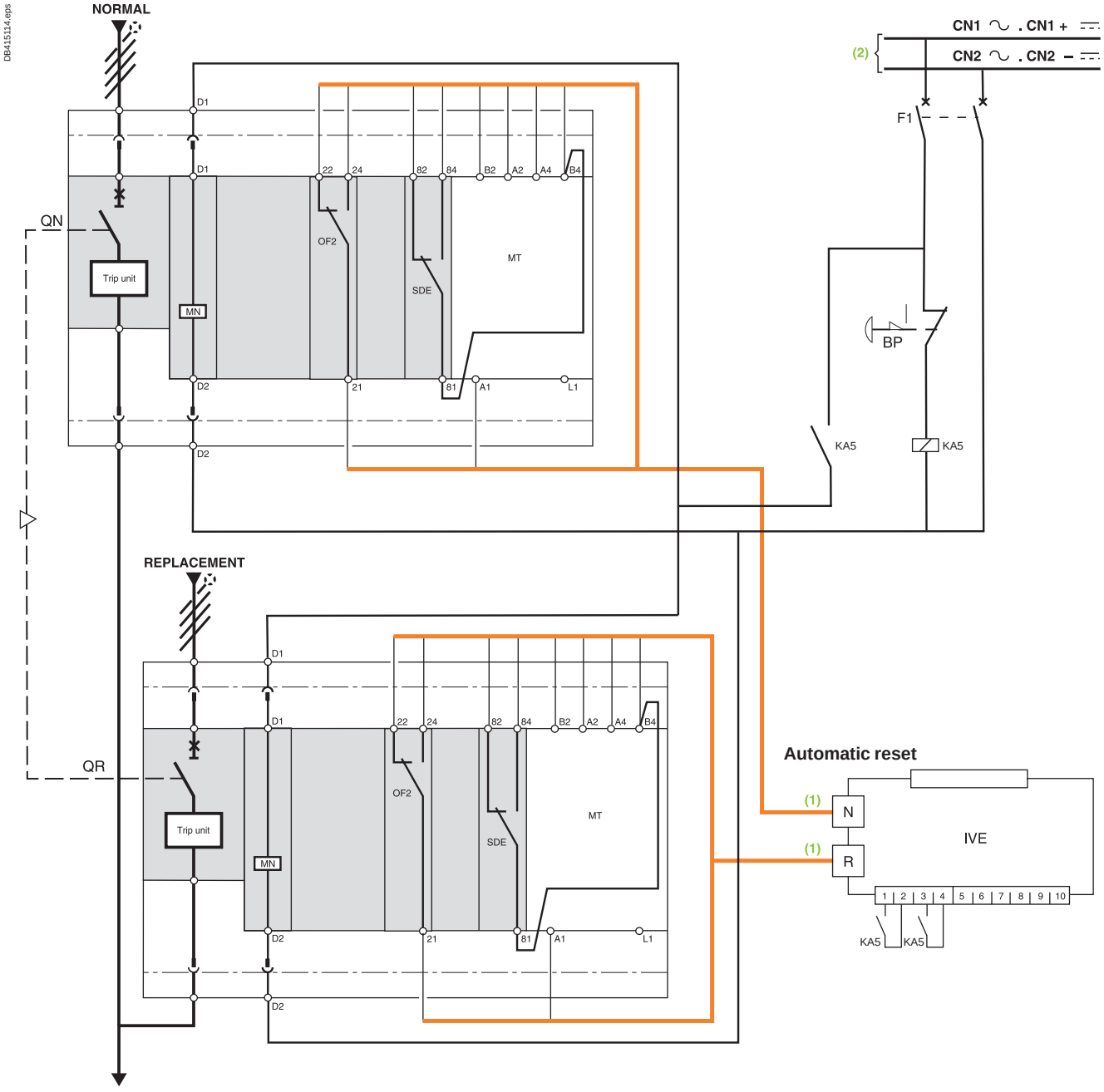

(1) Prefabricated wiring supplied.
(2) Independent auxiliary source.

Legends

QN	*"Normal" source Compact NSX equipped with motormechanism*
QR	*"Replacement" source Compact NSX equipped with motor mechanism*
MN	*undervoltage release*
OF2	*breaker ON/OFF indication contact*
SDE	*"fault-trip" indication contact*
MT	*motor mechanism*
IVE	*electrical interlocking and terminal block unit*
BP	*emergency off button with latching*
KA5	*auxiliary relay*
F1	*auxiliary power supply circuit breaker*

States permitted by mechanical interlocking system

Normal	Replacement
0	0
1	0
0	1

Note: *after a fault trip, the breaker must be reset manually by pressing its reset button.*
Diagram shown with circuits de-energised, circuit breakers open and relays in normal position.

Remote-operated source-changeover systems

2 Compact NSX100/630 devices

Diagram no. 51201179

Source-changeover system without automatic-control system

With emergency off by MX release and automatic reset

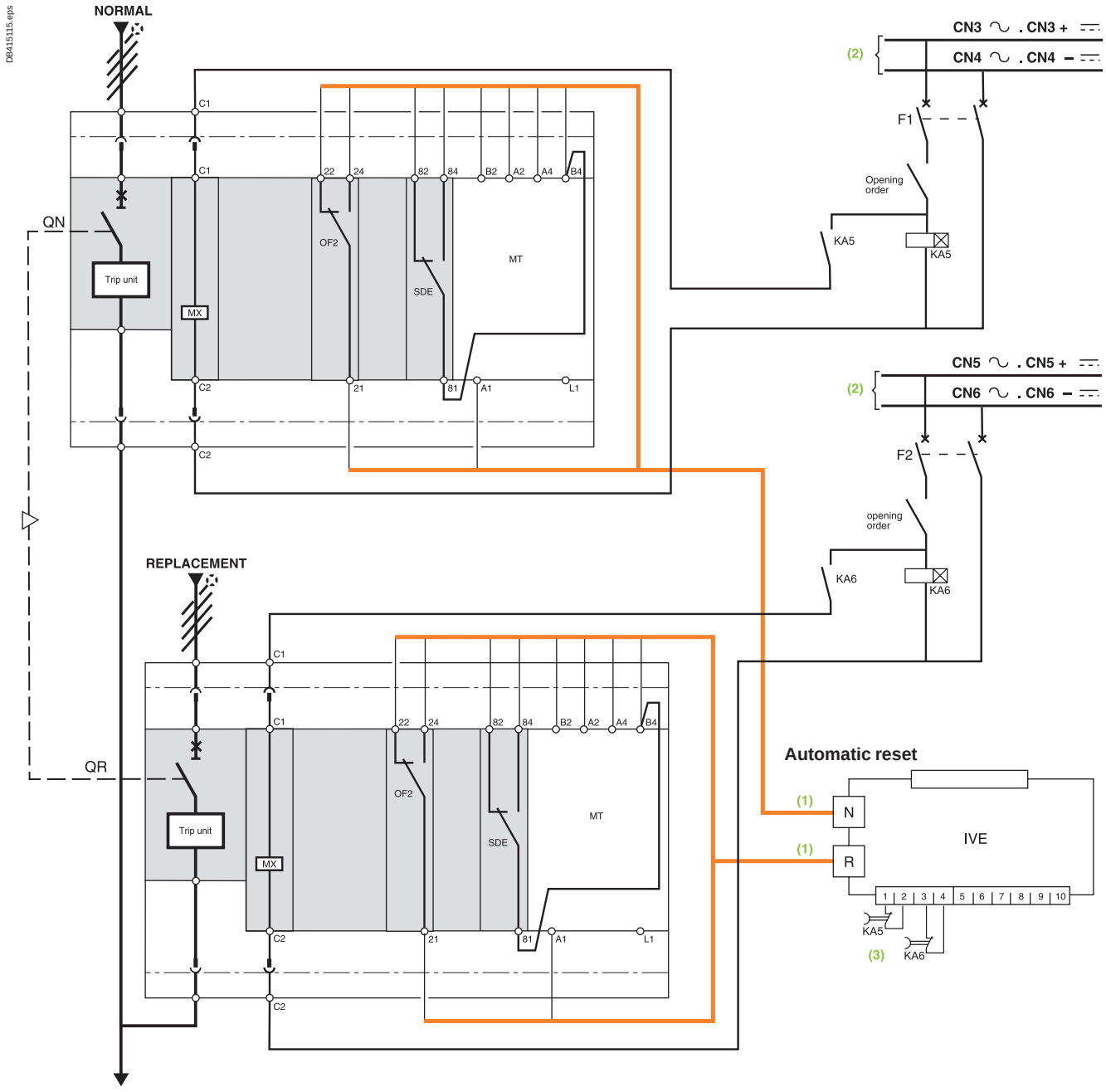

(1) Prefabricated wiring supplied
(2) This source can be:
- *the source present in the case of voltage monitoring*
- *an independent source.*
  In this case, the MX release must be protected.

(3) The reset orders must be delayed by 0.3 seconds.

Legends

QN	*"Normal" source Compact NSX equipped with motor mechanism*
QR	*"Replacement" source Compact NSX equipped with motor mechanism*
SDE	*"fault-trip" indication contact*
OF2	*breaker ON/OFF indication contact*
MX	*shunt release*
MT	*motor mechanism*
IVE	*electrical interlocking and terminal block unit*
KA5	*time-delayed auxiliary relays*
KA6	*time-delayed auxiliary relays*
F1	*auxiliary power supply circuit breaker*
F2	*auxiliary power supply circuit breaker*

States permitted by mechanical interlocking system

Normal	Replacement
0	0
1	0
0	1

Note: after a fault trip, the breaker must be reset manually by pressing its reset button.
Diagram shown with circuits de-energised, circuit breakers open and relays in normal position.

Remote-operated source-changeover systems
2 Compact NSX100/630, NS630b/1600 or Masterpact NT/NW devices

Electrical interlocking by the IVE unit

Independent order to Normal/Replacement source

DB415112.eps

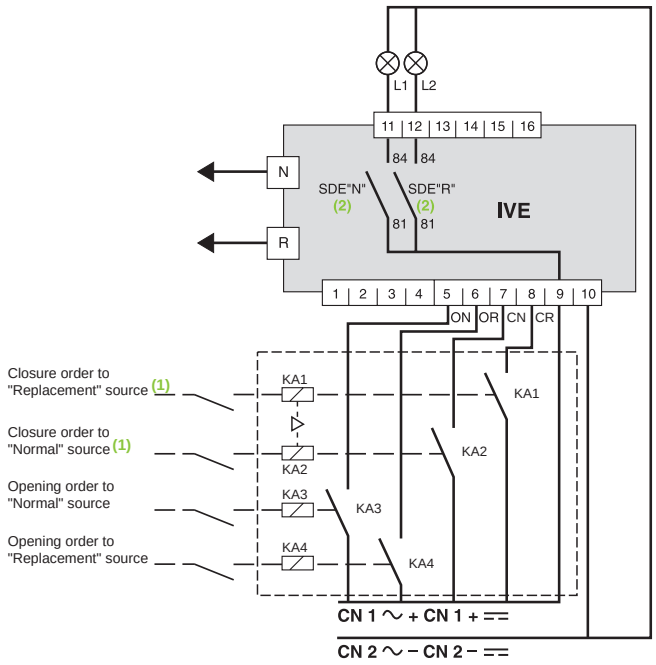

Controlling each circuit breaker independently.

Simultaneous order to Normal/Replacement source

DB415113.eps

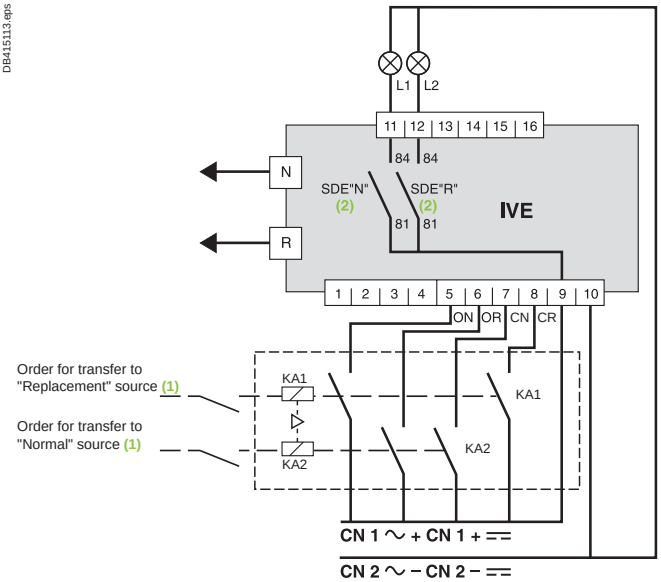

Control of two circuit breakers by "common" transfer order.

(1) See section "IMPORTANT" here after.
(2) Operating diagram: the SDE "fault-trip" signals are transmitted to the IVE unit. The SDE auxiliary contacts are mounted in the circuit breakers.

IMPORTANT
The relays controlling the closing order to the "Normal" and "Replacement" circuit breakers must be mechanically and/or electrically interlocked to prevent them from giving simultaneous closing commands.

It is recommended to use Tesys K relays from Schneider Electric reference LC2-K06010●●. These relays are mechanically and electrically interlocked.

Legends
ON *"Normal" source opening order*
OR *"Replacement" source opening order*
CN *"Normal" source closing order*
CR *"Replacement" source closing order*
KA1 *auxiliary relay*
KA2 *auxiliary relay*
KA3 *auxiliary relay*
KA4 *auxiliary relay*
L1 *"Normal" source "fault-trip" signal*
L2 *"Replacement" source "fault-trip" signal*
N *"Normal" source auxiliary wiring connector*
R *"Replacement" source auxiliary wiring connector*

Note: diagram shown with circuits de-energised, circuit breakers open and relays in normal position.

Source-changeover systems with automatic controllers

2 Compact NSX100/630, NS630b/1600 or Masterpact NT/NW devices

Source-changeover system with UA controller

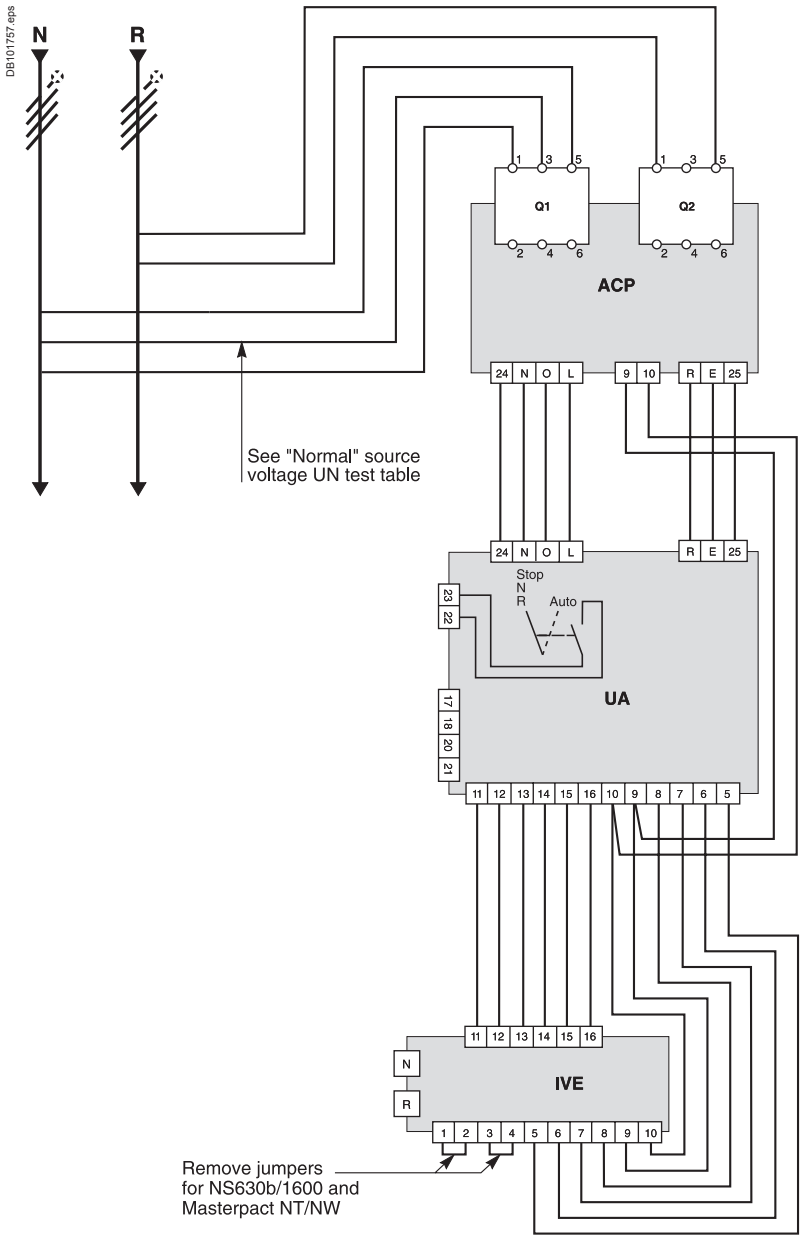

Load shedding and genset management

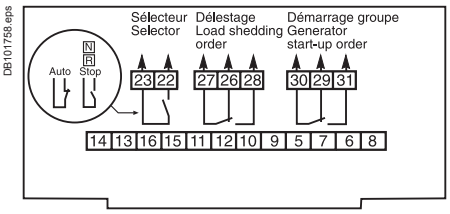

Transfer conditions

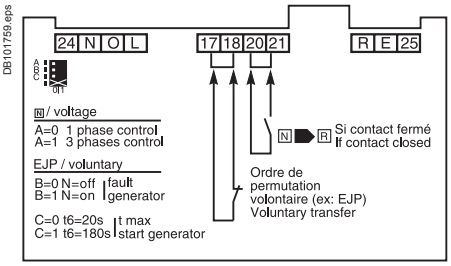

Terminals 20 and 21:
additional control contact (not part of controller).

Tests on "Normal" and "Replacement" source voltages

"Normal" source voltage UN test

DB101761.eps

Ref. UA UA150	29472 29474	29472 29474	29473 29475
Supply voltage / Switch position	N / φ 220/240VAC 50/60Hz	φ / φ 220/240VAC 50/60Hz	φ / φ 380/415VAC 50/60Hz 440V - 60Hz
A = 0	N φ 1L1 3L2 5L3 Q1	φ φ 1L1 3L2 5L3 Q1	φ φ 1L1 3L2 5L3 Q1
A = 1		φ φ φ 1L1 3L2 5L3 Q1	φ φ φ 1L1 3L2 5L3 Q1

"Replacement" source voltage UR test
The single-phase check for UR is implemented across terminals 1 and 5 of circuit breaker Q2.

Legends

Q1	*circuit breaker supplying and protecting the automatic-control circuits for the "Normal" source*
Q2	*circuit breaker supplying and protecting the automatic-control circuits for the "Replacement" source*
ACP	*control plate*
UA	*automatic controller*
IVE	*electrical interlocking and terminal block unit*

Note: *diagram shown with circuits de-energised, circuit breakers open and relays in normal position.*

Source-changeover systems with automatic controllers
Controller settings

Source changeover system with UA controller

Controller settings

DB101762.eps

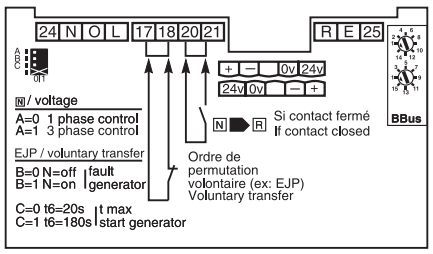

Using communication functions

DB101763.eps

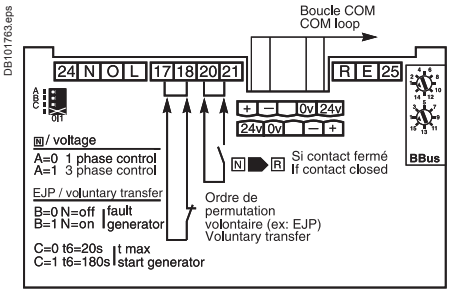

Tests on “Normal” source voltage
A = 0 single-phase test,
A = 1 three-phase test.

Voluntary transfert (e.g. for energy management)
■ action in the event of genset failure
B = 0 circuit breaker N opens,
B = 1 circuit breaker N remains closed.
■ maximum permissible genset startup time (T6)
C = 0 T = 120 s,
C = 1 T = 180 s.
After this time has elapsed, the genset is considered to have failed.

The address of the UA 150 controller is set using the two BBus dials.

Source-changeover systems with automatic controllers

2 Compact NSX100/630, NS630b/1600 or Masterpact NT/NW devices

Source-changeover system with BA controller

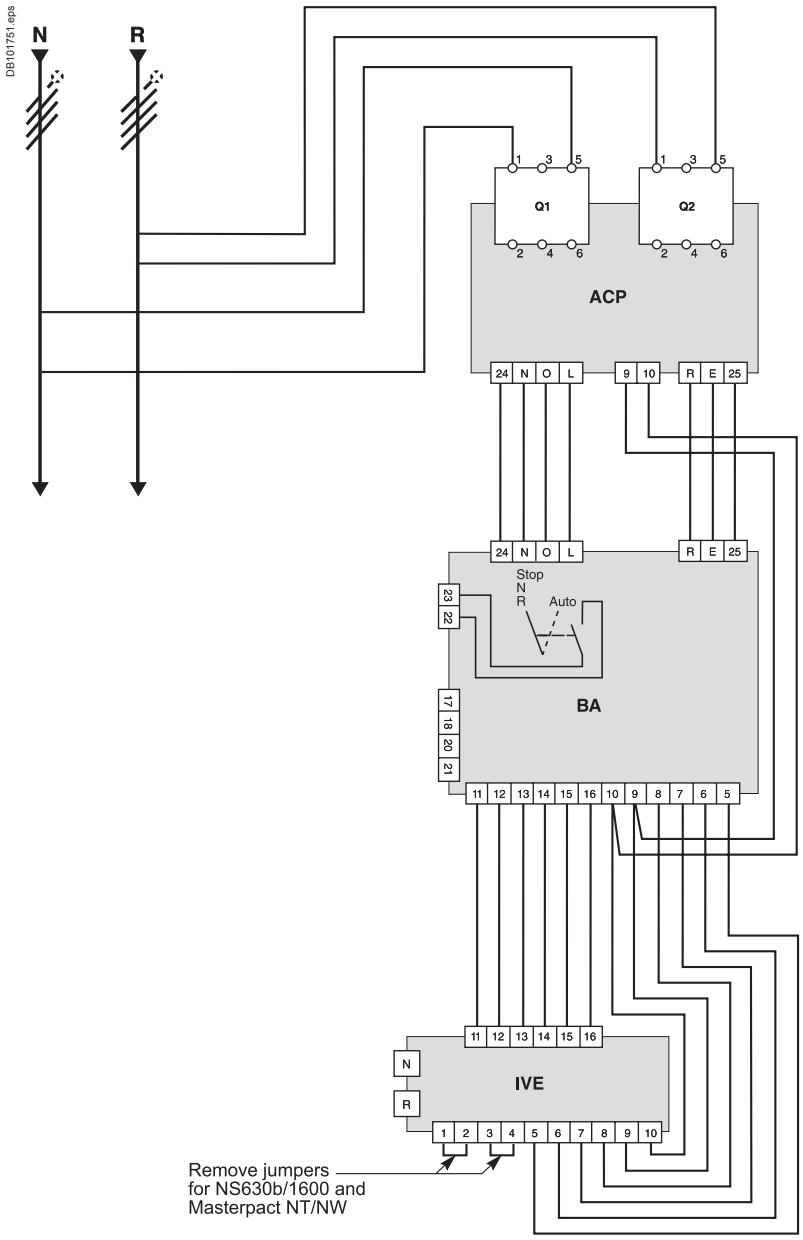

Coupling

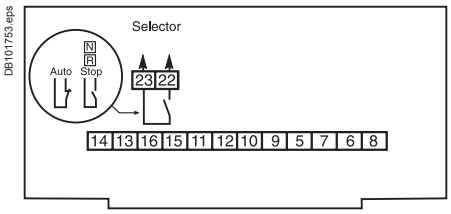

Transfer conditions

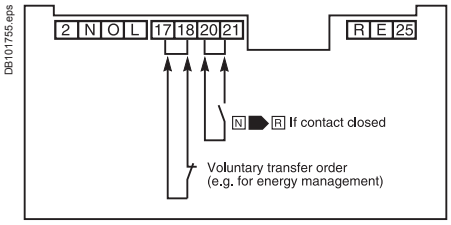

Terminals 20 and 21:
additional control contact (not part of controller).

Tests on “Normal” and “Replacement” source voltages
The single-phase check for UN and UR is implemented across terminals 1 and 5 of circuit breakers Q1 and Q2.

Legends

Q1	*circuit breaker supplying and protecting the automatic-control circuits for the “Normal” source*
Q2	*circuit breaker supplying and protecting the automatic-control circuits for the “Replacement” source*
ACP	*control plate*
BA	*automatic controller*
IVE	*electrical interlocking and terminal block unit*

Note: *diagram shown with circuits de-energised, circuit breakers open and relays in normal position.*

Remote-operated source-changeover systems

2 Compact NS630b/1600 devices

Diagram no. 51201183

Electrical interlocking by IVE unit

DB415209.eps

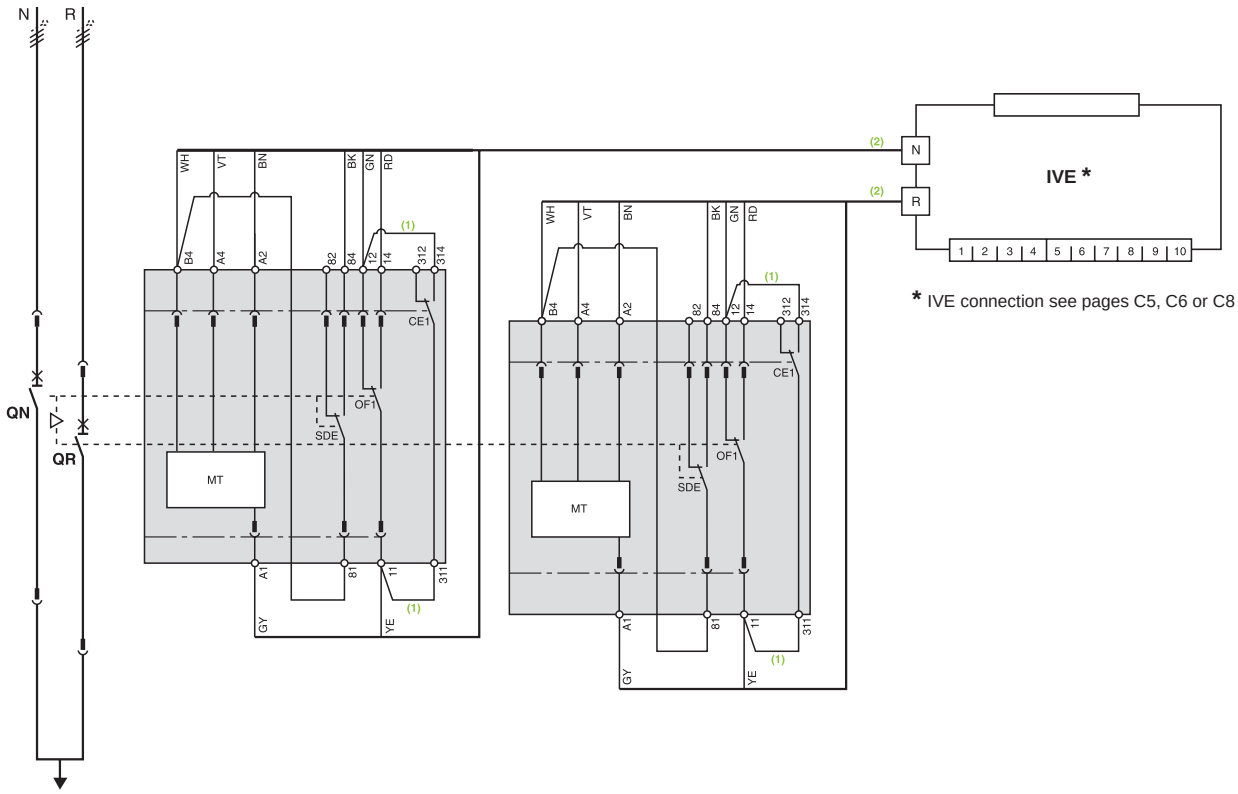

* IVE connection see pages C5, C6 or C8

ATTENTION

The diagram shows the electrical wiring for circuit breakers.
When wiring the SDE with **switch-disconnectors, connect wire BK to terminal 82.**

(1) Not to be wired on fixed version.
(2) Prefabricated wiring supplied.

Legends

QN	*"Normal" source Compact NS630b to 1600*
QR	*"Replacement" source Compact NS630b to 1600*
OF...	*breaker ON/OFF indication contact*
SDE	*"fault-trip" indication contact*
CE1	*"connected-position" indication contact (carriage switch)*
F1	*auxiliary power supply circuit breaker*
IVE	*electrical interlocking and terminal block unit*
ON	*"Normal" source opening order*
OR	*"Replacement" source opening order*
CN	*"Normal" source closing order (0.25 second delay)*
CR	*"Replacement" source closing order (0.25 second delay)*
MT	*Motor Mechanism*

Wiring colour codes

RD	GN	BK	VT	YE	GY	WH	BN
red	green	black	violet	yellow	grey	white	brown

States permitted by mechanical interlocking system

Normal	Replacement
0	0
1	0
0	1

Note: after a fault trip, the breaker must be reset manually by pressing its reset button.
Diagram shown with circuit breakers in connected position, open, charged, and ready to close.
Auxiliary power supply = supply voltage of auxiliary relays (KA...) = supply voltage of electrical auxiliaries (electrical operation, MT...).

Remote-operated source-changeover systems

2 Compact NS630b/1600 devices

Diagram no. 51201184

Electrical interlocking by IVE unit with emergency off by shunt release

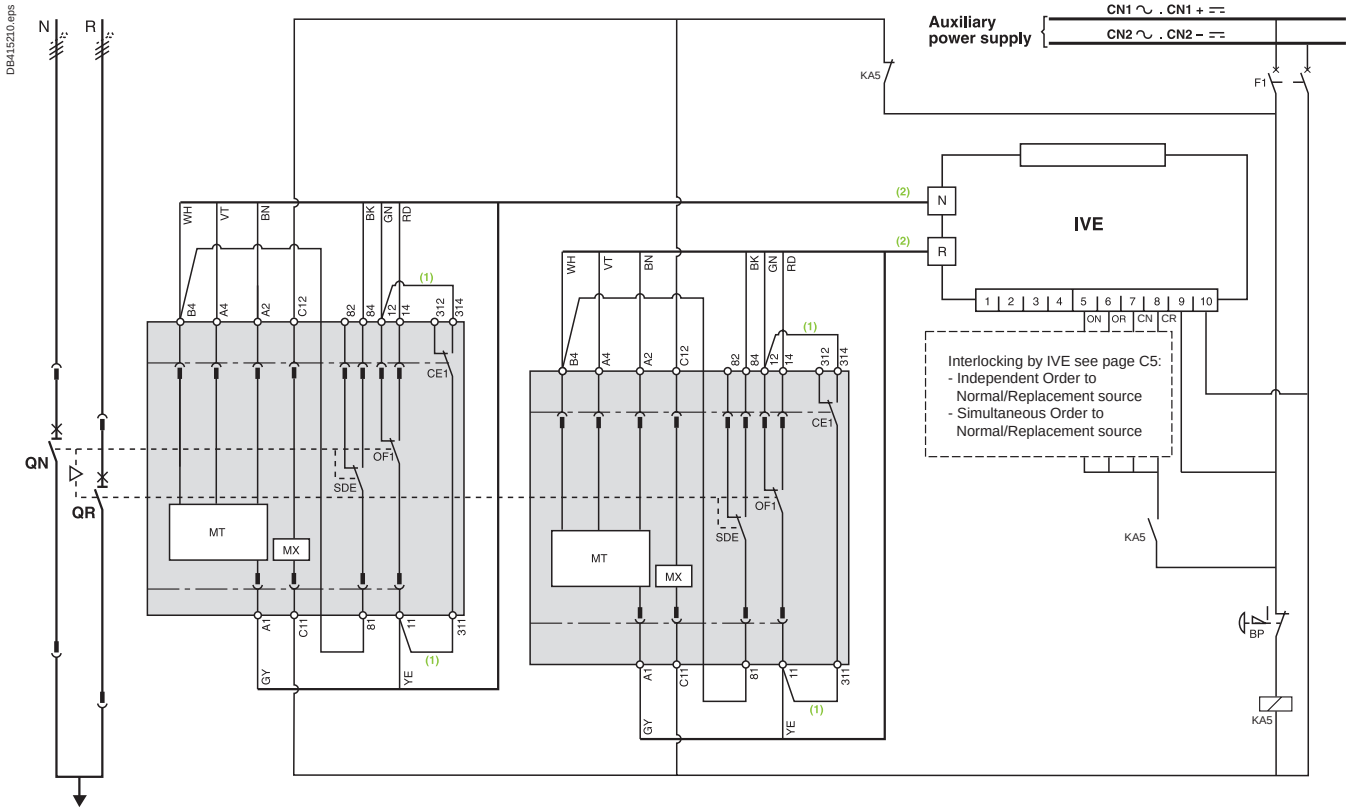

ATTENTION

The diagram shows the electrical wiring for circuit breakers.
When wiring the SDE with **switch-disconnectors, connect wire BK to terminal 82.**

(1) Not to be wired on fixed version.
(2) Prefabricated wiring supplied.

Legends

QN	*"Normal" source Compact NS630b to 1600*
QR	*"Replacement" source Compact NS630b to 1600*
OF...	*breaker ON/OFF indication contact*
SDE	*"fault-trip" indication contact*
CE1	*"connected-position" indication contact (carriage switch)*
F1	*auxiliary power supply circuit breaker*
IVE	*electrical interlocking and terminal block unit*
MX	*shunt release*
BP	*emergency off button with latching*
KA5	*auxiliary relay*
ON	*"Normal" source opening order*
OR	*"Replacement" source opening order*
CN	*"Normal" source closing order (0.25 second delay)*
CR	*"Replacement" source closing order (0.25 second delay)*
MT	*Motor Mechanism*

Wiring colour codes

RD	GN	BK	VT	YE	GY	WH	BN
red	green	black	violet	yellow	grey	white	brown

States permitted by mechanical interlocking system

Normal	Replacement
0	0
1	0
0	1

Note: after a fault trip, the breaker must be reset manually by pressing its reset button.
Diagram shown with circuit breakers in connected position, open, charged, and ready to close.
Auxiliary power supply = supply voltage of auxiliary relays (KA...) = supply voltage of electrical auxiliaries (electrical operation, MX, MT...).

Remote-operated source-changeover systems

2 Compact NS630b/1600 devices

Diagram no. 51201185

Electrical interlocking by IVE unit with emergency off by undervoltage release

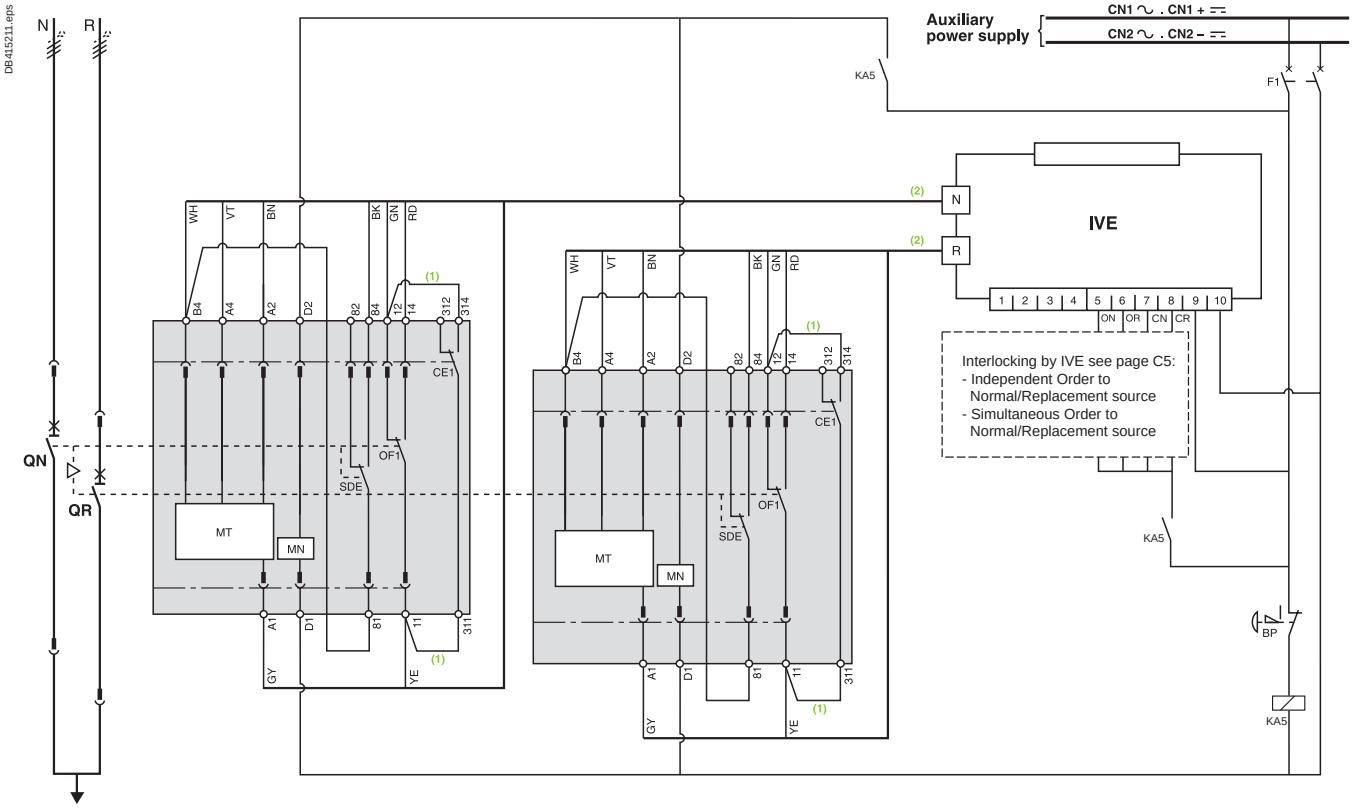

ATTENTION

The diagram shows the electrical wiring for circuit breakers. When wiring the SDE with **switch-disconnectors, connect wire BK to terminal 82.**

(1) Not to be wired on fixed version.
(2) Prefabricated wiring supplied.

Legends

QN	*"Normal" source Compact NS630b to 1600*
QR	*"Replacement" source Compact NS630b to 1600*
OF...	*breaker ON/OFF indication contact*
SDE	*"fault-trip" indication contact*
CE1	*"connected-position" indication contact (carriage switch)*
F1	*auxiliary power supply circuit breaker*
IVE	*electrical interlocking and terminal block unit*
MN	*undervoltage release*
BP	*emergency off button with latching*
KA5	*auxiliary relay*
ON	*"Normal" source opening order*
OR	*"Replacement" source opening order*
CN	*"Normal" source closing order (0.25 second delay)*
CR	*"Replacement" source closing order (0.25 second delay)*
MT	*Motor Mechanism*

Wiring colour codes

RD	GN	BK	VT	YE	GY	WH	BN
red	green	black	violet	yellow	grey	white	brown

States permitted by mechanical interlocking system

Normal	Replacement
0	0
1	0
0	1

Note: after a fault trip, the breaker must be reset manually by pressing its reset button.
Diagram shown with circuit breakers in connected position, open, charged, and ready to close.
Auxiliary power supply = supply voltage of auxiliary relays (KA...) = supply voltage of electrical auxiliaries (electrical operation, MN, MT...).

Catalogue numbers and order forms

Presentation *2*
Functions and characteristics *A-1*
Dimensions *B-1*
Electrical diagrams *C-1*

Source-changeover systems for 2 devices

Compact INS40 to INS2500 and INV100 to INV2500 D-2
Compact NSX100 to NSX630 D-3
Compact NS630b to NS1600 circuit breakers and switch-disconnectors D-5
Masterpact NT circuit breakers and switch-disconnectors D-7

Source-changeover systems for 2 or 3 devices

Masterpact NW circuit breakers and switch-disconnectors D-8

Source-changeover systems for 2 devices

Compact INS40 to INS630 switch-disconnectors D-10
Compact NSX100 to NSX630 / circuit breakers and switch-disconnectors D-12
Compact NS630b to NS1600 / circuit breakers and switch-disconnectors D-14
Masterpact NT or NW / circuit breakers and switch-disconnectors D-16

Source-changeover systems for 3 devices

Masterpact NW / circuit breakers and switch-disconnectors D-18

Source-changeover systems for 2 devices
Compact NSX100 to NSX630

Manual source changeover

Mechanical interlocking

DB404083.eps

For toggle controlled circuit breakers	NSX100...250	**LV429354**
	NSX400...630	**LV432614**

DB404084.eps

For rotary handled circuit breakers	NSX100...250	**LV429369**
	NSX400...630	**LV432621**

Key lock interlocking

DB404085.eps

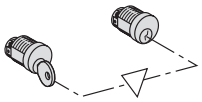

For rotary handled or remote controlled circuit breakers

2 locks, 1 key	Ronis 1351B.500	**41950**
	Profalux KS5 B24 D4Z	**42878**

Remote controlled source changeover

Plate + IVE unit

DB404086.eps

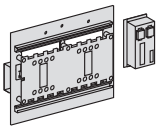

Source “normal”/source “replacement” (identical voltages)		24 to 250 V DC	48 to 415 V AC 50/60 Hz 440 V 60 Hz
NSX100...250/NSX100...250			
Plate + IVE unit [1]		**29351**	**29350**
Plate		**29349**	**29349**
IVE unit		**29356**	**29352**
Auxiliary switches 2 OF + 2 SDE	4 x	**29450**	4 x **29450**
Spare wiring system (device/IVE unit)		**29365**	**29365**
Back sockets option add:	Only long RC	[2]	[2]
Plug in base option add:	Plug in kit	[2]	[2]
NSX400...630/NSX100...630			
Plate + IVE unit [1]		**32611**	**32610**
Plate		**32609**	**32609**
IVE unit		**29356**	**29352**
Auxiliary switches 2 OF + 2 SDE	4 x	**29450**	4 x **29450**
Spare wiring system (device/IVE unit)		**29365**	**29365**
Back sockets option add:	Only long RC	[2]	[2]
Plug in base option add:	Plug in kit	[2]	[2]
	Adaptator kit for NSX100...250 1 x	**32618**	1 x **32618**

Control unit option

DB404087.eps

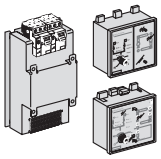

	110/127 V AC 50/60 Hz	220/240 V AC 50/60 Hz	380/415 V AC 50/60 Hz 440 V 60 Hz
ACP + controller BA [1]		**29470**	**29471**
Plate ACP		**29363**	**29364**
Controller BA		**29376**	**29377**
ACP + controller UA [1]	**29448**	**29472**	**29473**
Plate ACP	**29447**	**29363**	**29364**
Controller UA	**29446**	**29378**	**29380**
ACP + controller UA150 [1] (communication option)		**29474**	**29475**
Plate ACP		**29363**	**29364**
Controller UA150		**29379**	**29381**

Wiring cable between BA/UA and ACP/IVE

Wiring cable (1.5 meter)	**29368**	**29368**

Communication module

DB403922.eps

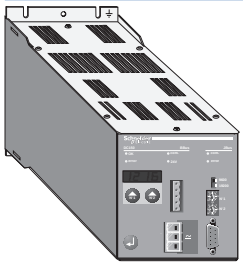

DC150 data concentrator 110-240 V AC / 115-125 V DC	**50823**

(1) The supply voltages BA/UA controller, ACP plate, IVE unit and the remote control must be identical whatever the source changeover type.
(2) See products pages.

Source-changeover systems for 2 devices
Compact NSX100 to NSX630 (cont.)

Connection accessories

Downstream coupling accessories

DB101062.eps
DB413273.eps

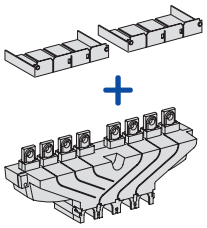

Short terminal shields (1 pair) + “normal” source/“replacement” source

	3P	4P
NSX100...250/NSX100...250 / 250 A	**LV429358**	**LV429359**
NSX400...630/NSX400...630 / 630 A	**LV432619**	**LV432620**

DB403921.eps

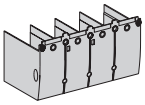

Long terminal shields (1 piece)

	3/4P
NSX100...250 long terminal shield	**LV429518**
NSX400...630 Long terminal shield, 45 mm (1 piece)	**LV432594**
Long terminal shield for spreaders, 52.5 mm (1 piece)	**LV432596**

Terminal extensions

DB115652.eps

Spreaders	52.5 mm	4P	**LV432491**

Typical composition of remote controlled source changeover

Remote controlled source changeover

DB413426.eps

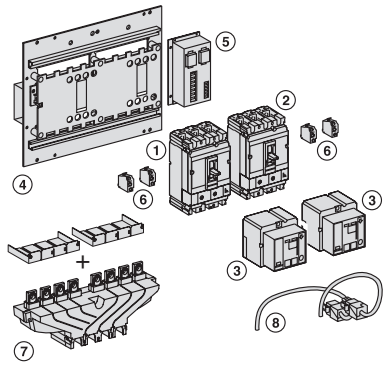

1 normal device N (1)
+ 1 replacement device R (2)
+ 2 remote controls (3)
+ 1 plate with interlocking (4) with IVE (5) and its wiring (8)
+ 2 plug-in kits (if plug-in version)
+ 1 adaptor kit for NSX100...250 plug-in (if NSX400...630 with NSX100...250)
+ auxilary switches (6)
2 x (1 OF + 1 SDE) for Compact NSX100...630
+ 1 downstream coupling accessory (7) for Compact NSX100...630 (option)
+ long RC (if back connection)

IVE voltages and remote controls are identical.

Associated control unit

DB403059.eps

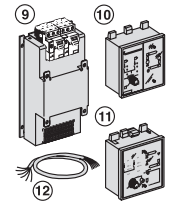

1 source changeover without associated control unit
+ 1 ACP (9) with BA control unit (10)
Or + 1 ACP (9) with UA control unit (11)
Or + 1 ACP (9) with UA150 control unit (11)
+ extension (12) for remote UA/BA connection on front of switchboard

IVE voltages + remote control + ACP + BA or UA are identical.

Source-changeover systems for 2 devices

Compact NS630b to NS1600 circuit breakers and switch-disconnectors

Interlocking for source-changeover systems

Mechanical interlocking

DB404090.eps

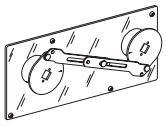

For 2 devices with extended rotary handles	**33890**

Interlocking using connecting rods for Compact electrically-operated devices

DB404091.eps

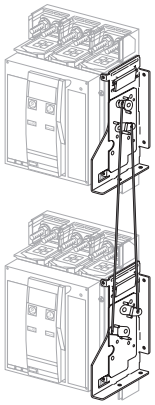

Complete assembly with 2 adaptation fixtures + rods	
2 Compact fixed devices	**33910**
2 Compact withdrawable devices	**33913**

Interlocking using cables for Compact electrically-operated devices

DB404092.eps

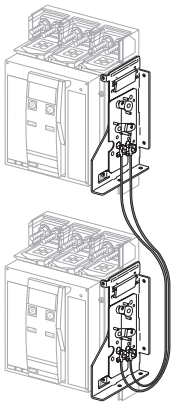

Complete assembly with 2 adaptation fixtures + cables	
2 Compact fixed devices	**33911**
2 Compact withdrawable devices	**33914**
1 Compact fixed + 1 Compact withdrawable device	**33915**

Source-changeover systems for 2 devices

Compact NS630b to NS1600 circuit breakers and switch-disconnectors (cont.)

Associated controller

The automatic-control option includes:
- an IVE electrical-interlocking unit
- an ACP control plate
- a BA or UA controller, depending on the required functions
- a UA/BA adapter kit.

Note: *the circuit breaker auxiliaries (MCH, MX, XF) and the automatic-control components (IVE, ACP, UA or BA) must have the same voltages.*

DB404093.eps

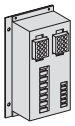

IVE electrical-interlocking unit	24 to 250 V DC	48/415 V AC 50/60 Hz 440 V 60 Hz
For 2 devices	**29356**	**29352**
Wiring kit for connection of 2 fixed/withdrawable devices to the IVE unit		**54655**

DB404087.eps

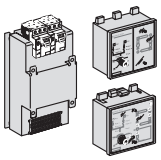

Control unit option	110/127 V AC 50/60 Hz	220/240 V AC 50/60 Hz	380/415 V AC 50/60 Hz 440 V 60 Hz
ACP + controller BA [(1)]		**29470**	**29471**
Plate ACP		**29363**	**29364**
Controller BA		**29376**	**29377**
ACP + controller UA [(1)]	**29448**	**29472**	**29473**
Plate ACP	**29447**	**29363**	**29364**
Controller UA	**29446**	**29378**	**29380**
ACP + controller UA150 [(1)] (communication option)		**29474**	**29475**
Plate ACP		**29363**	**29364**
Controller UA150		**29379**	**29381**

Communication module

DB403922.eps

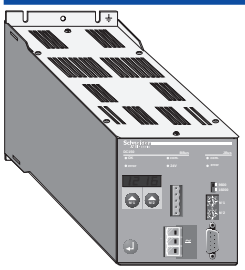

DC150 data concentrator 110-240 V AC / 115-125 V DC	**50823**

(1) *The supply voltages of the BA/UA controller, ACP plate, IVE unit and circuit breaker operating mechanism must be identical whatever the type of source-changeover system.*

Source-changeover systems for 2 devices

Compact NSX100 to NSX630 / Circuit breakers and switch-disconnectors

To indicate your choices, check the applicable square boxes ☐ and enter the appropriate information in the rectangles ☐.

Diagram for two Compact NSX devices

Without automatic control, without emergency off auxiliaries	(no. 51201177)	☐
Without automatic control, with emergency off by MN	(no. 51201178)	☐
Without automatic control, with emergency off by MX	(no. 51201179)	☐

Mechanical interlocking of two NSX100 to NSX630 devices

(fixed, plug-in or withdrawable)

Manually operated devices, mounted side by side:

Two devices with toggles	☐
Two devices with rotary handles	☐

Mechanical and electrical interlocking of two NSX100 to NSX630 devices

(fixed or plug-in)

Electrically operated devices, mounted side by side:

Select 1 base plate + IVE unit, the 4 auxiliary contacts and the options / accessories

Base plate + IVE unit	Identical voltages:		48 to 415 V AC 50/60 Hz		
	24 to 250 V DC	☐	440/480 V AC 60 Hz		☐
	“Normal” NSX100/250	☐	“Replacement” NSX100/250		☐
	“Normal” NSX400/630	☐	“Replacement” NSX400/630		☐
	“Normal” NSX400/630	☐	“Replacement” NSX100/250		☐
	Adapter kit for NSX400/630 with NSX100/250 (plug-in)				☐
Auxiliary contacts	2 OF + 2 SDE (mandatory)			Quantity	4
Options	Long rear connections		Plug-in base		☐
Downstream coupling accessory	3P	☐	NSX100/250		☐
	4P	☐	NSX400/630		☐
Prefabricated wiring	Between device and IVE			Quantity	

Automatic-control option

Power supply 220/240 V - 50/60 Hz:	ACP + BA controller	☐
	ACP + UA controller	☐
	ACP + UA150 controller	☐
Power supply 380/415 V - 50/60 Hz and 440 V - 60 Hz:	ACP + BA controller	☐
	ACP + UA controller	☐
	ACP + UA150 controller	☐

Source-changeover systems for 2 devices

Compact NSX100 to NSX630 / Circuit breakers and switch-disconnectors

(One sheet per device, make copies if necessary)

Name of customer:

Address for delivery:

Requested delivery date:

Customer order no.:

To indicate your choices, check the applicable square boxes and enter the appropriate information in the rectangles

Q 1 - NORMAL SOURCE

Q 2 - REPLACEMENT SOURCE

Circuit breaker or switch disconnector

Compact type	**NSX100/160/250**		**NSX400/630**
Rating	**A**		
Circuit breaker	**B, F, N, H, S, L**		
Switch-discon.	**NA**		
No. of poles	**2, 3 or 4**		
No. of poles protected	**2d, 3d or 4d**		

Fixed device		Front connections	
Plug-in/withdr.	Plug-in		Withdrawable
Earth-leakage protection	**ME, MH, MB**		
Vigi module	Voltage		**V**
	4P option on 3P NSX		

Trip unit

Thermal-mag.	**TMD** rating (16 … 250 A)	
	TMG rating (16 … 63 A)	
	MA rating (2.5 … 220 A)	
Electronic	**Micrologic 2.2**	**Micrologic 2.3**
	Micrologic 2.2 G	**Micrologic 2.3 AB**
	Micrologic 2.2 AB	**Micrologic 5.3 A**
	Micrologic 5.2 A	**Micrologic 5.3 E**
	Micrologic 5.2 E	**Micrologic 5.3 A-Z**
	Micrologic 5.2 A-Z	**Micrologic 6.3 A**
	Micrologic 6.2 A	**Micrologic 6.3 E**
	Micrologic 6.2 E	**Micrologic 1.3 M**
	Micrologic 2.2 M	**Micrologic 2.3 M**
	Micrologic 6.2 E-M	**Micrologic 6.3 E-M**
	SDTAM module	

External neutral CT			
24 V DC power supply connector			
ZSI wiring accessory for NS630b NW/NT			
External power supply module 24 V DC	24-30 V DC		48-60 V DC
	100-125 V AC		110-130 V AC
	200-240 V AC		380-415 V AC
Battery module			

Connection

Rear-connection kit	Short		Long
	Mixed		
NSX100/250 connectors	Snap-on 1.5□ to 95□ (< 160 A)		
	Snap-on 25□ to 95□ (< 250 A)		
	Snap-on 120□ to 185□ (< 250 A)		
	Distribution 6 x 1.5□ to 35□		
	Aluminium 2 cables 50□ to 120□		
NSX400/630 connectors	1 cable 35□ to 300□		
	2 cables 35□ to 240□		
Right-angle terminal extensions			
Straight extensions	NSX100/250		
Edgewise extensions		45° term. ext.	Dbl.-L term. ext.
Spreader	NSX100/250 (one piece)		(45 mm)
	NSX400/630 (52.5 mm)		(70 mm)
Cu cable lugs	NSX100/250 120□		150□ 185□
	NSX400/630		240□ 300□
Al cable lugs	NSX100/250		150□ 185□
	NSX400/630		240□ 300□
V mesrt Input for connector	For lugs NSX100/250 ⩽ 185□		
	For lugs NSX400/630		
Terminal shields	NSX100/250		Long
	NSX400/630		Long
	Long for 52.5 mm spreaders		
Interphase barriers			Set of 6
2 insulating scrn.	NSX100/250	NSX400/630	70 pitch

Test tool

Pocket battery for Micrologic
Maintenance case
USB maintenance interface
Power supply 110-240 V AC
Spare Micrologic cord

Indication and measurement

Ammeter module	Standard	3P	4P
	I max	3P	
Current-transformer module		3P	4P
Current-transformer module + TCU		3P	4P
Insulation-monitoring module		3P	4P
Voltage-presence indicator			
Auxiliary contact	OF SD SDE	SDV	Standard
	OF SD SDE	SDV	Low level
SDE adapter (TM, MA or Micrologic 2 trip units)			
SDX module			

Remote operation

Electrical operation	Motor mechanism	AC	DC	**V**
Voltage releases	Instantaneous MX	AC	DC	**V**
	Instantaneous MN	AC	DC	**V**
	Fixed time delay MN	AC	DC	**V**
	Adjust. time delay MN	AC	DC	**V**

Rotary handles

Direct	Black	Red and yellow front
	MCC conversion access.	CNOMO conversion access.
Extended	Black	Red and yellow front
	Telescopic handle for withdrawable device	

Indication auxiliary	1 early-break switch	2 early-make switches

Locking

Toggle (1 to 3 padlocks)	Removable	Fixed
Rotary handle	Keylock adapter (keylock not included)	
	Keylocks Ronis 1351B.500	Profalux KS5 B24 D4Z
Motor mechanism	Keylock adapter + keylock Ronis (special)	NSX100/250
	Keylock adapter (keylock not included)	NSX400/630
	Keylocks Ronis 1351B.500	Profalux KS5 B24 D4Z

Interlocking

Mechanical	Toggle operated	Rotary Handle
By key (2 keylocks, 1 key) for rotary handle	Locking kit without locks	
	Keylocks Ronis 1351B.500	Profalux KS5 B24 D4Z

Installation accessories

IP30 escutcheon for all types (toggle/rotary handle/motor mechanism)
IP30 escutcheon (with access to toggle + trip unit)
IP30 escutcheon for Vigi module
IP40 escutcheon for all types (toggle/rotary handle/motor mechanism)
IP40 escutcheon for Vigi module
IP40 escutcheon for Vigi or ammeter module
Toggle cover
Sealing accessories
DIN rail adapter
3P 60 mm busbar adapter

Plug-in / withdrawable configuration accessories

Auxiliary connections	1 automatic connector fixed part with 9 wires (for base)		
	1 automatic connector moving part with 9 wires (for circuit breaker)		
	1 sup. for 3 auto. conn. moving parts		1 sup. for 2 auto. conn.
	9-wire manual auxiliary connector (fixed + moving)		
Plug-in base accessories	Long insulated terminals		Set of 2
	2 IP4 shutters for base		
Chassis accessories	Escutcheon collar	Toggle	Vigi
	Locking kit (keylock not included)		
	2 carriage switches (conn./disconnected position indication)		
Parts or plug-in Withdrawable kits	Plug-in base FC/RC 2P	3P	4P
	Set of two power connections	Standard	Vigi
	Safety trip for advanced opening		
	For 3P/4P chassis		Moving part
			Fixed part
Adaptater for plug-in base (for terminal shield or interphase barriers)			

Communication

	NSX Cord L = 0.35 m	NSX Cord L = 1.3 m
	NSX Cord U > 480 V AC L = 0.35 m	NSX Cord L = 3 m
BSCM (NSX400/630)		
Communicating motor mechanism 220-240 V		
Switchboard front display module FDM121		
FDM mounting accessory		
Modbus interface		
Stacking accessory		
ULP line termination		
RJ45 connectors female/female	Wire length RJ45 L = 0.3 m	Wire length RJ45 L = 0.6 m
	Wire length RJ45 L = 1 m	Wire length RJ45 L = 2 m
	Wire length RJ45 L = 3 m	Wire length RJ45 L = 5 m

Source-changeover systems for 2 devices

Compact NS630b to NS1600 / Circuit breakers and switch-disconnectors

To indicate your choices, check the applicable square boxes ☐ and enter the appropriate information in the rectangles ▭.

Diagram for two Compact NS devices

Electrical interlocking with lockout after fault:

Permanent replacement source (with IVE unit)	(no. 51201183)	☐
With emergency off by MX (with IVE unit)	(no. 51201184)	☐
With emergency off by MN (with IVE unit)	(no. 51201185)	☐

Interlocking using connecting rods between two NS630b to NS1600 devices

Manually operated devices installed side-by-side:

	For two fixed NS devices with extended rotary handles	☐

Electrically operated devices installed one above the other:

Select a complete set including two adaptation fixtures and the connecting rods

Complete set for:	2 fixed NS devices	☐
	2 withdrawable NS devices	☐

Interlocking using cables between two NS630b to NS1600 devices

Electrically operated devices installed one above the other or side-by-side:

Select a complete set including two adaptation fixtures and the cables

Complete set for:	2 fixed NS devices	☐
	2 withdrawable NS devices	☐
	1 fixed NS device + 1 withdrawable NS device	☐

Electrical interlocking between two NS630b to NS1600 devices

1 IVE unit 48/415 V - 50/60 Hz and 440 V - 60 Hz	☐
1 wiring kit for connection between 2 fixed / withdrawable devices to the IVE unit	☐

Automatic-control option

Power supply 110 V - 50/60 Hz:	ACP + BA controller	☐
	ACP + UA controller	☐
	ACP + UA150 controller	☐
Power supply 220/240 V - 50/60 Hz:	ACP + BA controller	☐
	ACP + UA controller	☐
	ACP + UA150 controller	☐
Power supply 380/415 V - 50/60 Hz and 440 V - 60 Hz:	ACP + BA controller	☐
	ACP + UA controller	☐
	ACP + UA150 controller	☐

Source-changeover systems for 2 devices

Compact NS630b to NS1600 / Circuit breakers and switch-disconnectors

(One sheet per device, make copies if necessary)

Name of customer:

Address for delivery:

Requested delivery date:

Customer order no.:

To indicate your choices, check the applicable square boxes and enter the appropriate information in the rectangles

Device identification:

Q 1 - NORMAL SOURCE

Q 2 - REPLACEMENT SOURCE

Circuit breaker or switch disconnector

Compact type	**NS630b to NS1600**	
Rating	**A**	
Circuit breaker	**N, H, L**	
Switch-disconnector	**NA**	
Number of poles	**3 or 4**	
Device	Fixed	
	Withdr. with chassis	
	Withdr. without chassis (moving part only)	
Chassis alone without connections		

Micrologic control unit

Basic protection	**2.0**		**5.0**		**6.0**					
A - ammeter	**2.0**		**5.0**		**6.0**		**7.0**			
E - energy meter	**2.0**		**5.0**		**6.0**					
P - power meter			**5.0**		**6.0**		**7.0**			

AD - external power-supply module V

TCE - external sensor (CT) for neutral protection

Rectangular sensor 280 x 115 mm

TCW - external sensor for SGR protection

LR - long-time rating plug
- Standard 0.4 to 1 Ir
- Low setting 0.4 to 0.8 Ir
- High setting 0.8 to 1 Ir
- LT OFF

Communication

Eco COM module Modbus	Device		Chassis	
Front Display Module (FDM121)			Mounting accessory	
Breaker ULP cord	L = 0.35 m			
	L = 1.3 m			
	L = 3 m			

Connections

Horizontal rear connections	Top		Bottom	
Vertical rear connections	Top		Bottom	
Front connections	Top		Bottom	
4x240² bare cable connectors + shields	NS - FC fixed			
Long connection shields	NS - FC fixed			
Vertical-connection adapters	NS - FC fixed, withdr.			
Cable-lug adapters	NS - FC fixed, withdr.			
Arc chute screen	NS - FC fixed			
Interphase barriers	NS - FC fixed, withdr.			
Spreaders	NS - FC fixed, withdr.			
VO - safety shutters on chassis	NS - FC fixed			

Indication contacts

SD trip indication (maximum 1)
- 6 A-240 V AC
- Low level

SDE fault-trip indication (maximum 1) (SDE integrated in electrically operated devices)
- 6 A-240 V AC
- Low level

OF ON/OFF indication contacts (maximum 3)
- 6 A-240 V AC qty
- Low level qty

Carriage switches (possible combinations: 3 CE, 2 CD, 1 CT)

CE - "connected" position	6 A-240 V AC	qty	Low level	qty
CD - "disconnected" position	6 A-240 V AC	qty	Low level	qty
CT - "test" position	6 A-240 V AC	qty	Low level	qty

Auxiliary terminals for chassis alone
- Jumpers (set of 10)
- 3-wire terminal (30 parts)
- 6-wire terminal (10 parts)

Remote operation

Electrical operation	Standard				Communicating	
	Power supply	AC		DC		**V**
Voltage releases	MX	AC		DC		**V**
	MN	AC		DC		**V**
	MN delay unit			Adjustable		Non-adjustable

Rotary handles for fixed and withdrawable device

Direct	Black		Red on yellow front
			CNOMO conversion access.
Extended	Black		Red on yellow front
	Telescopic handle for withdrawable device		
Indication auxiliary	6 A-240 V AC		2 early-make switches
			2 early-break switches

Locking

Toggle (1 to 3 padlocks)	Removable system		Fixed system
Rotary handle using a keylock	OFF position		ON and OFF positions
	Ronis 1351B.500		Profalux KS5 B24 D4Z
	Keylock kit (without keylock)		
For electrically operated devices	**VBP** - ON/OFF pushbutton locking		
	OFF position locking:		
	VCPO - by padlocks		
	VSPO - by keylocks		
	Keylock kit (w/o keylock)	Profalux	Ronis
	1 keylock	Profalux	Ronis
	2 identical keylocks, 1 key	Profalux	Ronis

Chassis locking in "disconnected" position:

VSPD - by keylocks	Keylock kit (w/o keylock)	Profalux	Ronis
		Kirk	Castell
	1 keylock	Profalux	Ronis
	2 identical keylocks, 1 key	Profalux	Ronis
	2 keylocks, different keys	Profalux	Ronis

Optional connected/disconnected/test position locking

VPEC - door interlock
- On right-hand side of chassis
- On left-hand side of chassis

VPOC - racking interlock

VDC - mismatch protection

Accessories

CDM - mechanical operation counter

CDP - escutcheon

CP - transparent cover for escutcheon

OP - blanking plate for escutcheon

Mounting brackets for fixed NS — For mounting on horizontal plane

Test kits — Mini test kit — Portable test kit