TeSys U
Starter-controllers

Catalogue

October 2008

Schneider Electric

TeSys motor starters - open version
TeSys U starter-controllers

TeSys U starter-controllers

Presentation . . . . . page 2
Application examples . . . . . page 8
Non-reversing and reversing power bases . . . . . page 12
Add-on contact blocks and auxiliary contact modules . . . . . page 14
Control units and function modules . . . . . page 18
PowerSuite software workshop . . . . . page 22
Parallel wiring module and pre-wired coil connection components . . . . page 26
Communication modules . . . . . page 28
Communication gateways LUF P . . . . . page 44
Characteristics . . . . . page 46
Tripping curves . . . . . page 54
Selection curves according to categories . . . . . page 58
Dimensions, mounting . . . . . page 60
Schemes . . . . . page 62
Data profile under AS-Interface . . . . . page 69
Main registers accessible with the communication modules . . . . . page 69

TeSys U starter-controllers, variable speed controllers and soft start/soft stop units

Altistart U01 and TeSys U . . . . . page 74
Magnetic control unit for the protection of variable speed controllers and soft start/soft stop units . . . . . page 84

TeSys U controllers

Presentation . . . . . page 90
Application example . . . . . page 90
Characteristics . . . . . page 92
References . . . . . page 94
Combinations providing type 2 coordination . . . . . page 95
Dimensions, mounting . . . . . page 96
Schemes . . . . . page 97

Product reference index . . . . . page 98

TeSys motor starters - open version
TeSys U starter-controllers

107983

TeSys U starter-controller

Presentation

The TeSys U starter-controller is a D.O.L. starter *(1)* which performs the following functions:
- Protection and control of single-phase or 3-phase motors:
  - isolation and breaking function,
  - overload and short-circuit protection,
  - thermal overload protection,
  - power switching.
- Control of the application:
  - protection function alarms, application monitoring (running time, number of faults, motor current values, ...),
  - logs (last 5 faults saved, together with motor parameter values).

These functions can be added by selecting control units and function modules which simply clip into the power base.
This late customisation is even possible after power and control circuit wiring has been completed.

TeSys U is a flexible range that meets the current and future needs of system builders, panel builders and machine manufacturers, as well as those of additional systems.

From design through to operation, TeSys U offers many advantages and simplifies the selection of components in comparison with a traditional solution.
- the breaking, isolation and contactor functions are incorporated in a single block; this means fewer references to be ordered and easy selection without any risk of error, because a single reference covers all needs up to 15 Kw.
- the control unit has a wide setting range. It can operate on a d.c. or a.c. supply. The number of references required is divided by 10, compared with traditional solutions.

The compact components in the TeSys U range are mounted on a single rail, so optimising the amount of space required in enclosures. By eliminating power wiring between the circuit-breaker and contactor, TeSys U reduces installation times in enclosures.
Setting-up accessories simplify or completely eliminate wiring between components and eliminate the risk of errors.

538849

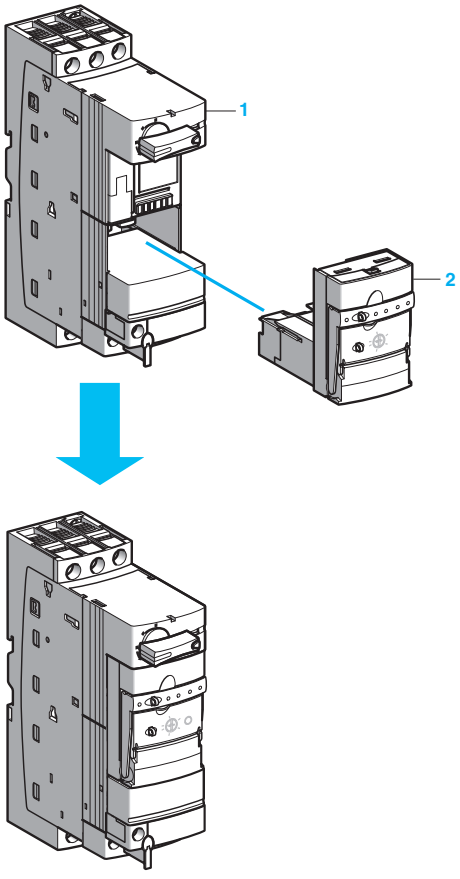

Starter-controller

Consists of a power base and a control unit.

Power bases 1

The power base is independent of the control voltage.
It is available from 0 to 15 kW at 400 V.
It incorporates the breaking function with a breaking capacity of 50 kA at 400V, total coordination (continuity of service) and the switching function.
- 2 ratings are available: 0…12 A and 0…32 A.
- Non-reversing (LUB) and reversing (LU2B).

Control units 2

These must be selected according to the control voltage, the power of the motor to be protected and the type of protection required.
- **Standard control unit (LUCA)**: satisfies the basic protection requirements for motor starters: overload and short-circuit.
- **Magnetic control unit (LUCL)**: when fitted upstream of a variable speed drive or soft start-soft stop unit and used in conjunction with an LUB 12 or LUB 32 power base, this unit provides isolation and short-circuit protection of the motor starter.
- **Advanced control unit (LUCB, LUCC or LUCD)**: allows additional advanced functions such as alarm, fault differentiation,...
- **Multifunction control unit (LUCM)**: suitable for the most sophisticated control and protection requirements.

The control units are interchangeable without rewiring and without using tools.
They have a wide range of adjustment (range of 4) and low heat dissipation, due to the fact that bimetallic overload protection components are no longer used.

(1) For use with resistive and inductive loads. Control of d.c. or capacitive loads is not possible.

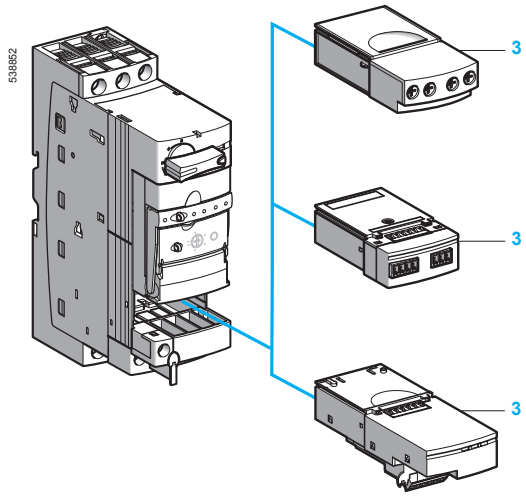

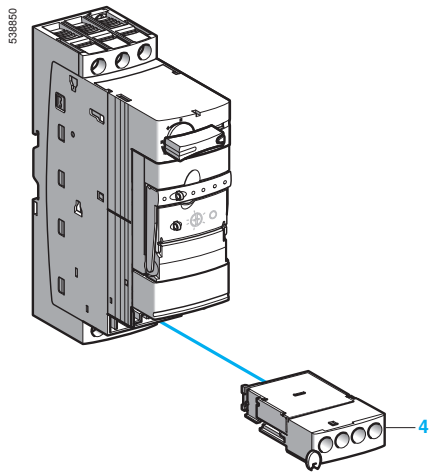

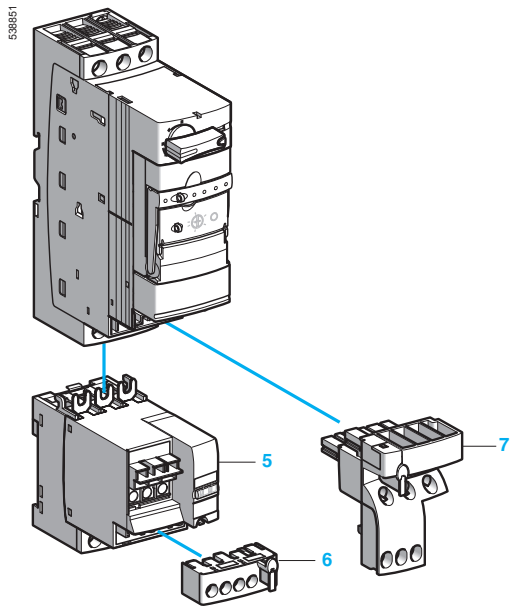

Control options

Function modules can be used to increase the functions of the starter-controller.

Function modules 3

Must be used in conjunction with advanced control units.
4 types are available:
- ■ Thermal overload alarm (LUF W10).
- ■ Thermal fault and manual reset (LUF DH11).
- ■ Thermal fault and automatic or remote reset (LUF DA01 and LUF DA10).
- ■ Indication of motor load (LUF V2), which can also be used in conjunction with the multifunction control unit.

All alarm and fault information processed by these modules is available on digital contacts.

Communication modules 3

The information processed is exchanged:
- ■ Via a parallel bus:
- □ parallel wiring module (LUF C00).

- ■ Via a serial bus:
- □ AS-Interface modules (ASILUF C5 and ASILUF C51),
- □ Profibus DP module (LUL C07),
- □ CANopen module (LUL C08),
- □ DeviceNet module (LUL C09),
- □ Advantys STB module (LUL C15).
- □ Modbus modules (LUL C031 and LUL C033).

They must be used in conjunction with a ⎓ **24 V control unit and require a** ⎓ **24 V supply voltage**.
Connection to other protocols, such as Fipio, is possible via gateway modules (LUFP) or via the TeSysPort for Ethernet.

Auxiliary contact modules (LUFN) 3

3 possible configurations: 2 N/O, 1 N/O + 1 N/C or 2 N/C.

Auxiliary contacts 4

They provide the following information: fault signalling and rotary knob in "ready" ⏻ position.

Power options

Reverser block 5

Allows a non-reversing power base to be converted to reversing operation.
The reverser block (LU2M) is mounted directly beneath the power base without modifying the width of the product (45 mm). The reverser block (LU6M) is mounted separately from the power base when the height available is limited.

Limiter-disconnector LUA LB

This unit is mounted directly on the power base. It allows the breaking capacity to be increased up to 130 kA at 400 V, with a visible break.

Setting-up accessories

Plug-in terminal blocks 6

The control terminal blocks are of the plug-in type, so allowing wiring to be prepared away from the machine or the replacement of products without rewiring.

Control circuit pre-wiring system 7

Numerous pre-wired accessories provide simple, clip-in connections, e.g. connection of reverser control terminals, ...

Structure of a motor starter

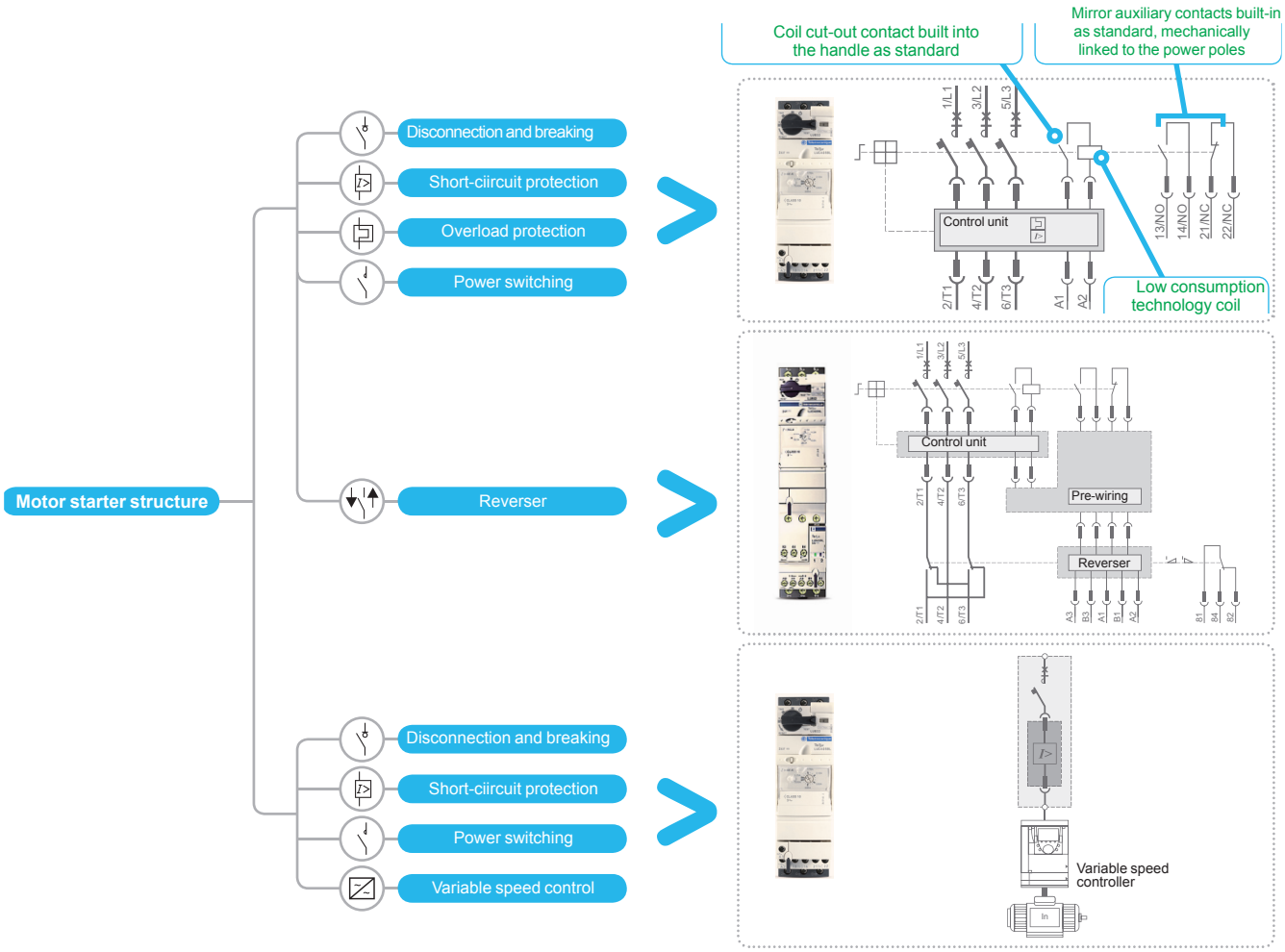

Understanding the commercial references through a comparison with a traditional motor starter

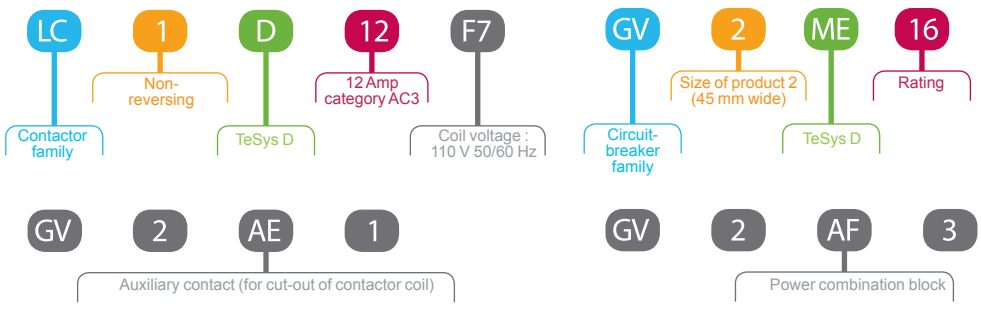

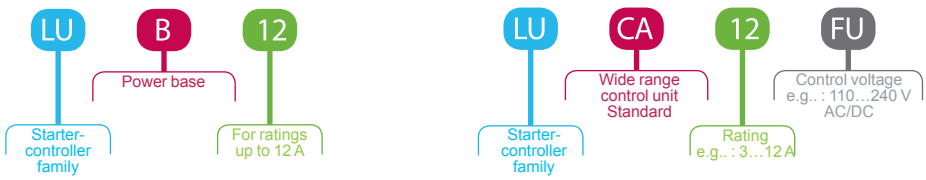

Selection

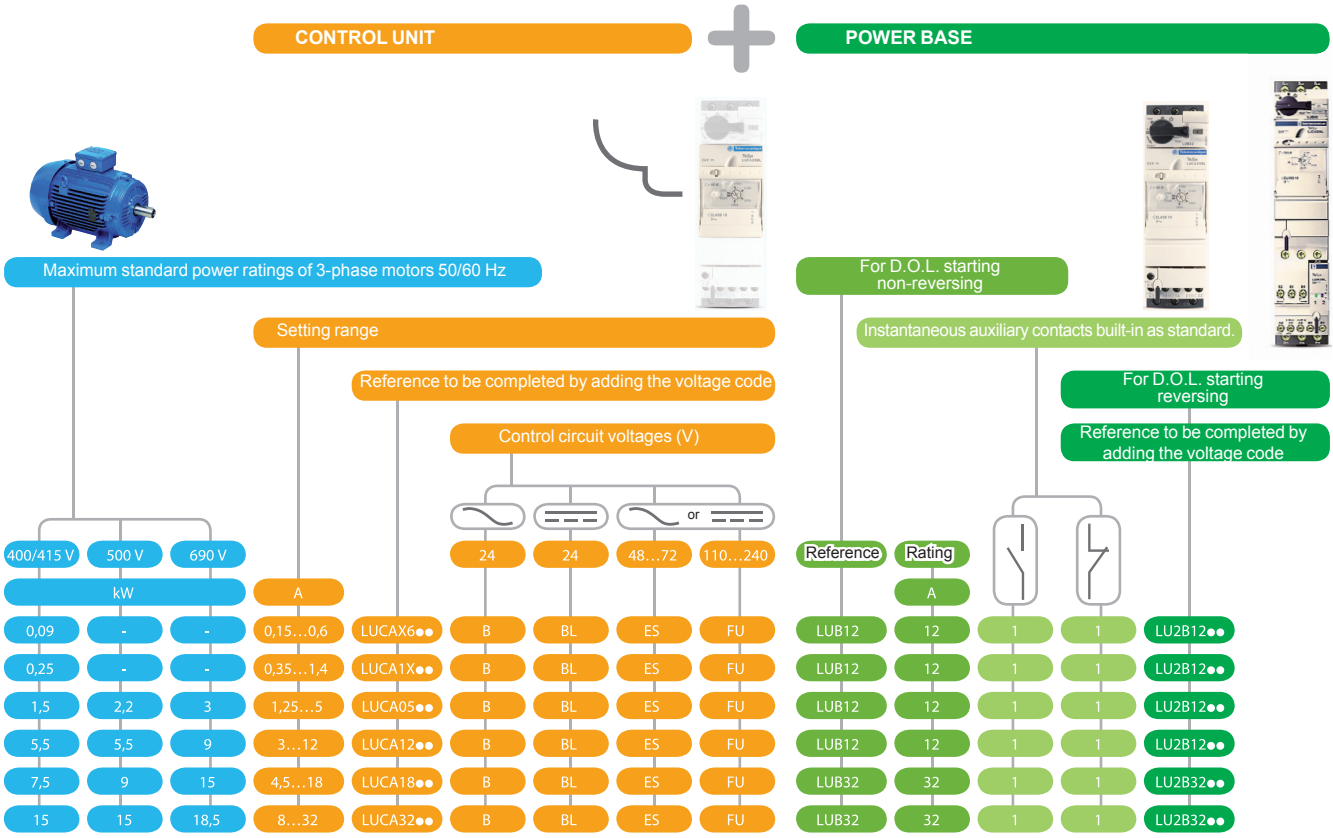

400/415 V kW	500 V kW	690 V kW	A		24	24	48…72	110…240	Reference	Rating A			
0,09	-	-	0,15…0,6	LUCAX6●●	B	BL	ES	FU	LUB12	12	1	1	LU2B12●●
0,25	-	-	0,35…1,4	LUCA1X●●	B	BL	ES	FU	LUB12	12	1	1	LU2B12●●
1,5	2,2	3	1,25…5	LUCA05●●	B	BL	ES	FU	LUB12	12	1	1	LU2B12●●
5,5	5,5	9	3…12	LUCA12●●	B	BL	ES	FU	LUB12	12	1	1	LU2B12●●
7,5	9	15	4,5…18	LUCA18●●	B	BL	ES	FU	LUB32	32	1	1	LU2B32●●
15	15	18,5	8…32	LUCA32●●	B	BL	ES	FU	LUB32	32	1	1	LU2B32●●

Auxiliary contacts

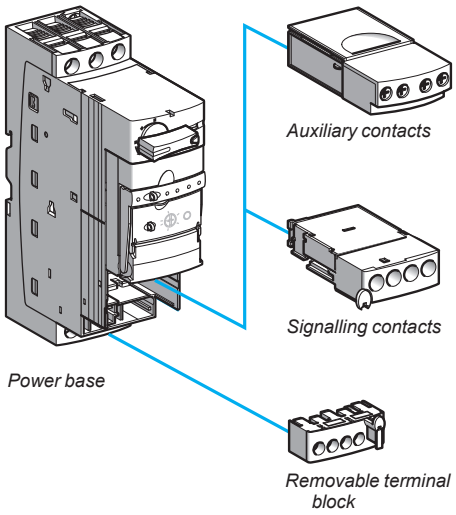

Auxiliary contacts						
Number of contacts	2	-	1	1	-	2
Power pole status	NO	NC	NO	NC	NO	NC
References	LUF N20		LUF N11		LUF N02	

Signalling contacts				
Number of contacts	1	1	2	-
Fault signalling		NC (95-96)	NO (97-98)	
Position of rotary knob	NO (17-18)		NO (17-18)	
References	LUA 1C11		LUA 1C20	

TeSys motor starters - open version
TeSys U starter-controllers

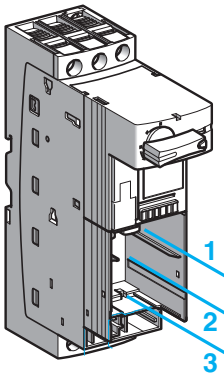

Power base
LUB or LU2B

1

Standard control unit

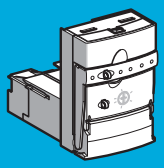

LUCA
Class 10 - 3-phase
(see page 19)

■ Protection against overloads and short-circuits.
■ Protection against phase failure and phase imbalance.
■ Earth fault protection (equipment protection only).
■ Manual reset.

Magnetic control unit

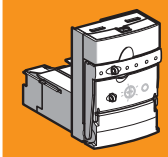

LUCL
For use with a variable speed controller or a soft start-soft stop unit
(see page 84)

■ Short-circuit protection
■ Manual Reset
Motor thermal overload protection must be provided by the variable speed controller or soft starter.

2

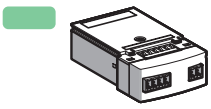

Thermal overload signalling module and manual reset
LUF DH11
(see page 21)

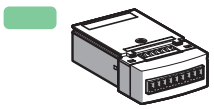

Thermal overload signalling modules and automatic or remote reset
LUF DA01 and **LUF DA10**
(see page 21)

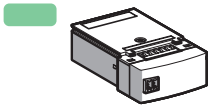

Thermal overload alarm module
LUF W10
(see page 21)

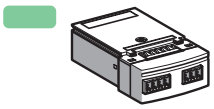

Motor load indication module
LUF V2
(see page 21)

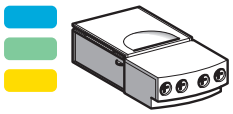

Auxiliary contact modules
LUF N●●
(see page 15)

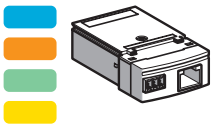

Parallel wiring module
LUF C00
(see page 26)

3

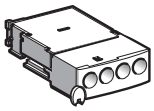

Fault signalling contacts
LUA1●● (Depending on configuration)
(see page 15)

Note: *the colour indicates possible combinations with the selected control unit.*
Example: function module LUF DH11 can only be used with an advanced control unit.

1

Advanced control unit

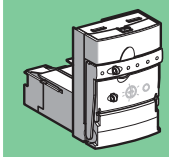

LUCB
Class 10 - 3-phase

LUCC
Class 10 - single-phase

LUCD
Class 20 - 3-phase
(see page 19)

- ■ Same functions as the standard control unit
- ■ In addition, in conjunction with a function module:
- □ fault differentiation with manual reset,
- □ fault differentiation with remote or automatic reset,
- □ thermal overload alarm,
- □ indication of motor load.

Multifunction control unit

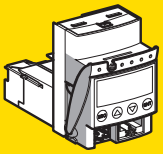

LUCM
Classes 5 to 30 - single-phase and 3-phase
(see page 20)

- ■ Same functions as the standard control unit
- ■ In addition, reset parameters can be set to manual or automatic.
- ■ Protection function alarm.
- ■ Indication on front panel or on remote terminal via Modbus RS 485 port.
- ■ "Log" function.
- ■ "Monitoring" function, indication of main motor parameters on front panel of the control unit, or via a remote terminal
- ■ Differentiation of thermal overload and magnetic fault.
- ■ Overload, no-load running.

2

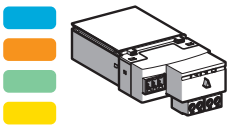

AS-Interface communication modules *(1)*
ASILUF C5 and **ASILUF C51**
(see page 28)

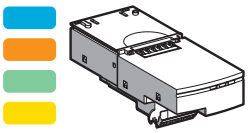

Profibus DP communication module *(1)*
LUL C07
(see page 30)

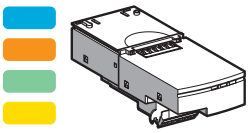

CANopen communication module *(1)*
LUL C08
(see page 34)

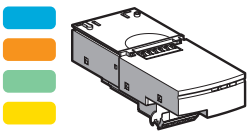

DeviceNet communication module *(1)*
LUL C09
(see page 36)

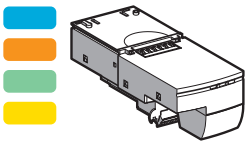

Advantys STB communication module *(1)*
LUL C15
(see page 40)

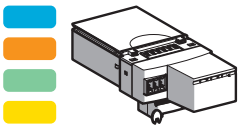

Modbus communication modules *(1)*
LUL C031 and **LUL C033**
(see page 42)

(1) Communication modules can only be combined with a ⎓ 24 V control unit (LUC● ●● BL).

TeSys motor starters - open version
TeSys U starter-controllers

525971

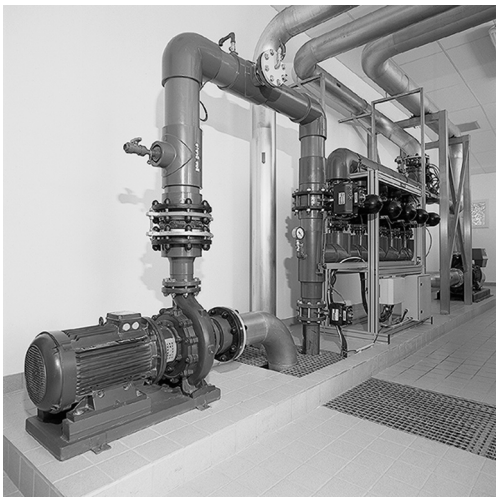

Application
Starting and protection of a pump.

Operating conditions
- Power: 4 kW at 400 V.
- In: 9 A.
- Maximum of 10 class 10 starts per hour.
- Duty class S3.
- 3-wire control:
  - Start button (S2),
  - Stop button (S1),
- Control circuit voltage: ∿ 230 V.

Products used

Description	Item	Quantity	Reference	Page
Power base 12 A with screw clamp connections	1	1	**LUB 12**	12
Standard control unit	2	1	**LUCA 12FU**	19

510901

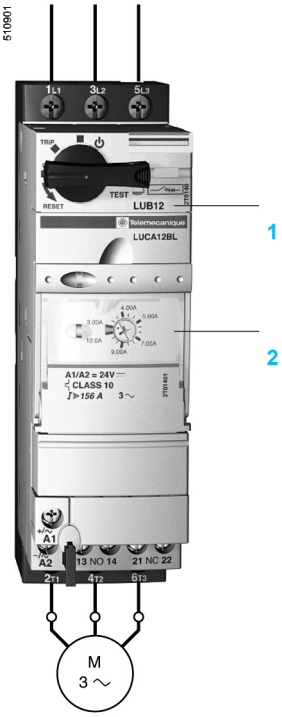

Functions performed
- Short-circuit protection with level of protection of 50 kA at 400V.
- Total coordination of protection devices conforming to EN 60947-6-2 (continuity of service) in case of a short-circuit.
- Electronic protection against thermal overloads with an adjustment range of 4.
- Load switching (2 million operating cycles in category AC-43 at In).
- Indication of motor status by N/C or N/O contact.
- Interlock between the motor starter control and the position of the rotary knob; not possible to start the motor when the knob is in the OFF position.

Scheme

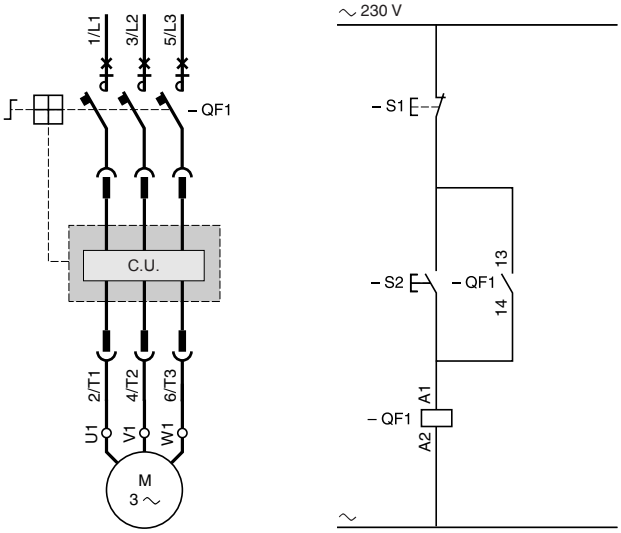

TeSys motor starters - open version
TeSys U starter-controllers

510902

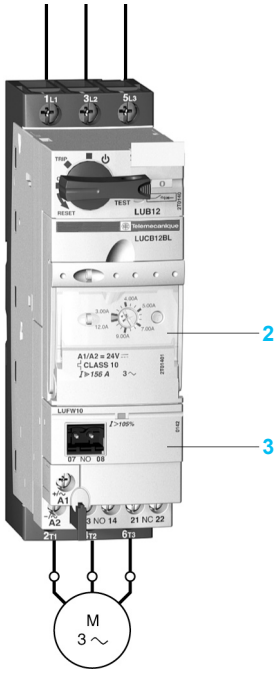

Application

Expansion of an existing installation for improved control of its operation.

Operating conditions

Monitor the status of the motor and obtain alarm signalling by a digital contact in order to improve operation of the pump and anticipate a complete stoppage due to thermal overload.

Additional products used

Description	Item	Quantity	Reference	Page
Replace the standard control unit with an advanced control unit and insert a thermal overload alarm function module.				
Advanced control unit	2	1	**LUCB 12FU**	19
Alarm function module	3	1	**LUF W10**	21

Functions performed

■ Alarm information is generated by the advanced control unit and is processed by the thermal overload alarm function module to make it usable.
■ The advanced control unit includes a thermal trip Test button on its front panel.

Scheme

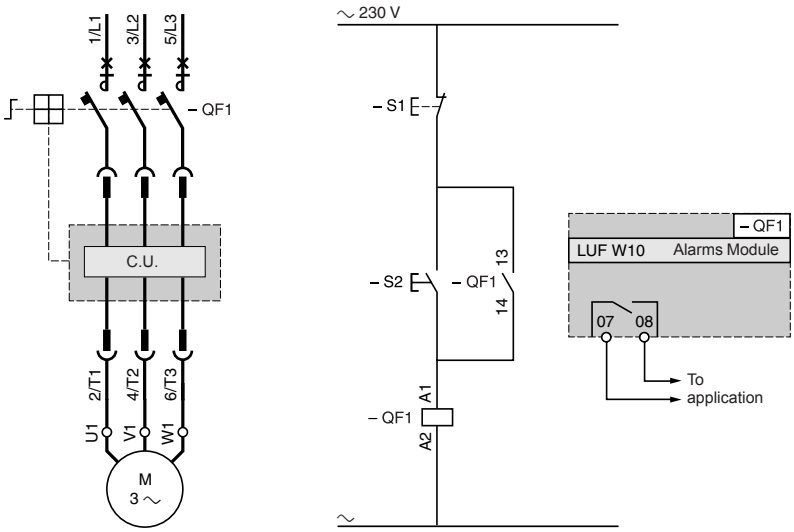

Other versions

The advanced control unit can provide other functions, depending on the type of function modules used (instead of the LUF W module described above):
- thermal fault signalling with function modules LUF DA01, LUF DA10 or LUF DH11,
- indication of motor load with function module LUF V2. This module delivers a 4-20 mA analogue signal, which is proportional to the average 3-phase current drawn by the motor. This allows the load current to be monitored and provides access to other application functions using this value, or to predictive or preventive maintenance possibilities (replacement of the motor before it breaks down).

TeSys motor starters - open version
TeSys U starter-controllers

520971

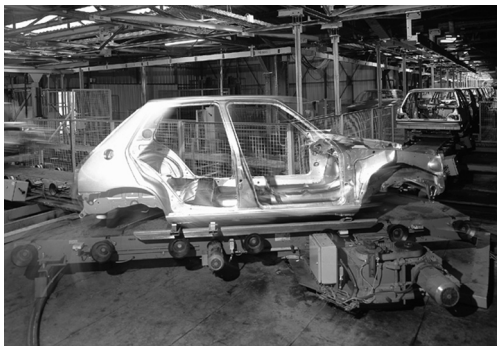

Application
Manual control of a 2-position turntable.

Operating conditions
- Power: 2.2 kW at 400 V.
- In: 6 A.
- 30 starts per hour
- Duty class S4.
- 3-wire control:
  - Pushbutton for Position 1 (S1),
  - Pushbutton for Position 2 (S2),
  - Stop button (S5),
- Stopping at the positions is achieved by limit switches S3 and S4.
- Control circuit voltage: ~ 115 V.

523761

Products used

Description	Item	Quantity	Reference	Page
Power base, reversing, 12 A with screw clamp connections	1	1	**LU2B 12FU**	13
Standard control unit	2	1	**LUCA 12FU**	19

Functions performed
- Short-circuit protection with level of protection of 50 kA at 400V.
- Total coordination of protection devices conforming to EN 60947-6-2 (continuity of service) in case of a short-circuit.
- Electronic protection against thermal overloads with an adjustment range of 4.
- Load switching (2 million operating cycles in category AC-43 at In).
- Interlock between the motor starter control and the position of the rotary knob; not possible to start the motor when the knob is in the OFF position.

Electrical interlocking is ensured by pre-wired connector LU9M R1C included on base LU2B 12. The design of the reversing power block makes mechanical interlocking unnecessary.

Scheme (manual control)

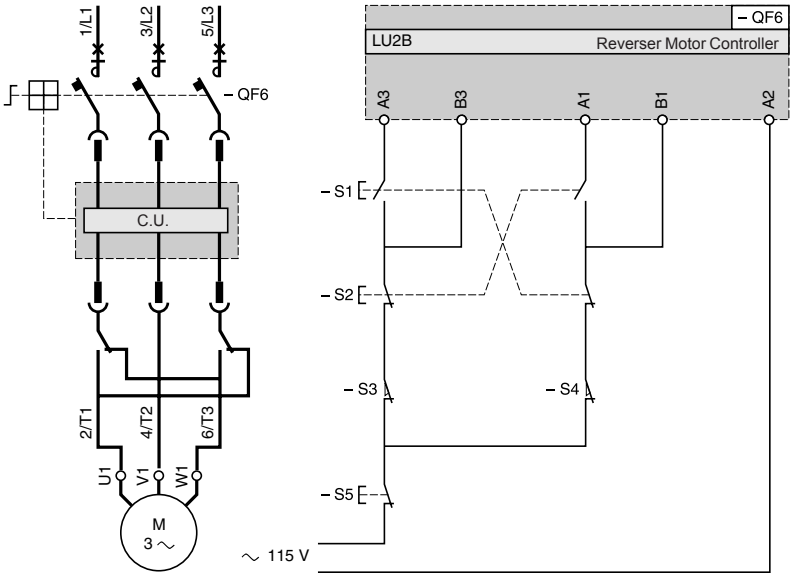

TeSys motor starters - open version
TeSys U starter-controllers

520969

519003

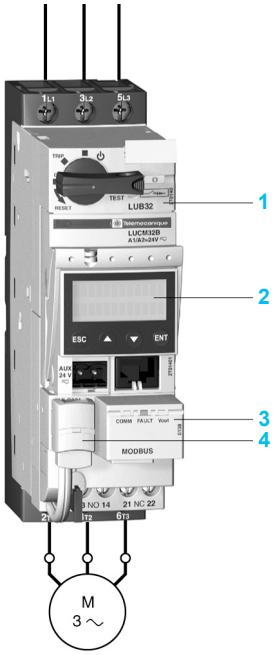

Modbus profile IEC 64915		
Commands (Register 704)		Status (Register 455)
Forward running	Bit 0	Ready (available)
Reverse running	Bit 1	Poles closed
Reserved	Bit 2	Fault
Reset	Bit 3	Alarms
Reserved	Bit 4	Tripped
Connection test	Bit 5	Reserved reset enabled
Reserved	Bit 6	A1-A2 powered
Reserved	Bit 7	Motor running
Reserved	Bit 8	Motor current % (bit 0)
Reserved	Bit 9	Motor current % (bit 1)
Reserved	Bit 10	Motor current % (bit 2)
Reserved	Bit 11	Motor current % (bit 3)
Reserved 3-phase control	Bit 12	Motor current % (bit 4)
Reserved	Bit 13	Motor current % (bit 5)
Reserved	Bit 14	Reserved
Reserved	Bit 15	Motor starting

Application

Monitoring operation of a surface pump in a water treatment plant to avoid dry running, which could lead to destruction of the pump.

Operating conditions

- Power: 15 kW at 400 V.
- In: 28.5 A.
- Duty class S1.
- Control circuit voltage: ⎓ 24 V.
- Control-command by PLC and serial link using the Modbus protocol.

Products used

Description	Item	Quantity	Reference	Page
Power base 32 A without connections	1	1	**LUB 320**	12
Multifunction control unit	2	1	**LUCM 32BL**	20
Modbus communication module	3	1	**LUL C033**	43
Pre-wired coil connection Connection of communication module output terminals to the coil terminals	4	1	**LU9B N11C**	43
Connection cable for connecting the communication module to the serial bus	–	1	**VW3 A8 306 R●●**	43
T-junction	–	1	**VW3 A8 306 TF03**	43

Functions performed

- Short-circuit protection with level of protection of 50 kA at 400V.
- Total coordination of protection devices conforming to EN 60947-6-2 (continuity of service) in case of a short-circuit.
- Electronic protection against thermal overloads with an adjustment range of 4.
- Load switching (1.5 million operating cycles in category AC-43 at In).
- Measurement of load current and detection of no-load running by the multifunction control unit.
- Interlock between the motor starter control and the position of the rotary knob; not possible to start the motor when the knob is in the OFF position.
- No-load running or operation under load. To use this function, the following parameters must be entered:
  - trip: the answer yes/no enables or disables the function,
  - time before tripping: the time period during which the value of the current must be below the tripping threshold in order to cause tripping (adjustable from 1 to 200 s),
  - tripping threshold: value as a % of the load current ratio in relation to the setting current. If the ratio remains below this threshold for the time specified in the previous parameter, the product trips (adjustable from 30 to 100 %).
- Indication of the various motor starter statuses and currents.

Schemes

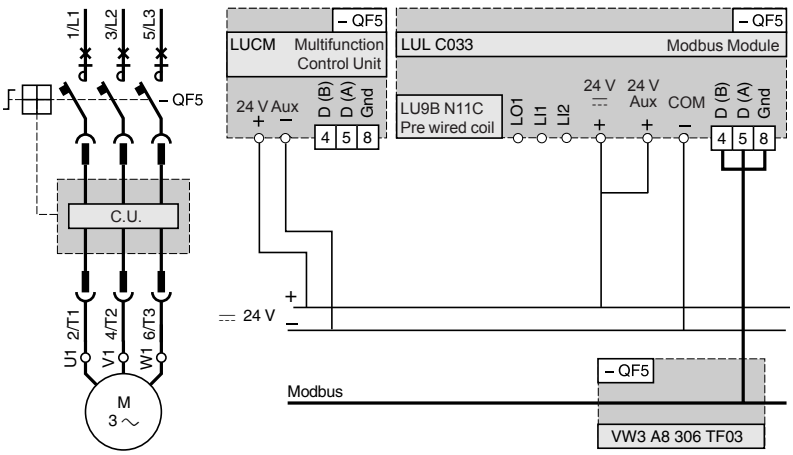

Other functions

The multifunction control unit incorporates other control and protection functions, such as: monitoring and control of phase current, alarm, …
Module LUL C033 also provides a programmable output and two configurable discrete inputs.

TeSys motor starters - open version

TeSys U starter-controllers

Non-reversing power bases

LUB ●2

LUB ●20

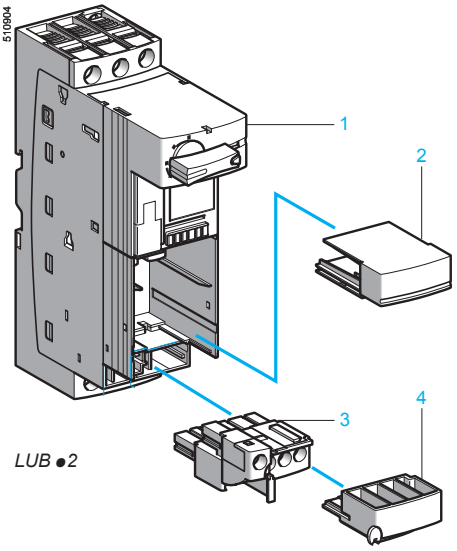

LUB ●2

Two versions of control connection configuration are available:

- **connection by screw terminals**, plug-in control terminal block,
- **without connections**. This version enables wiring to be prepared in advance and is recommended when a communication module is required (allowing the use of control connection prewiring accessories) or when a reverser block is to be mounted by the customer.

Power bases for non-reversing D.O.L. starting *(1)*

Connection		Item *(2)*	Rating			Reference	Weight
Power	Control		≤ 440 V	500 V	690 V		
			A	A	A		kg
Screw clamp terminals	Screw clamp terminals	1 + 2 + 3 + 4	12	12	9	**LUB 12**	0.900
			32	23	21	**LUB 32**	0.900
	Without connections	1 + 2	12	12	9	**LUB 120**	0.865
			32	23	21	**LUB 320**	0.865

These bases have 2 auxiliary contacts: 1 N/O (13-14) and 1 N/C (21-22) which indicate the closed or open position of the power poles.

A low power internal contact allows power supply to the control unit to be switched off when the rotary knob is no longer in the ON position.

The power bases must be used in conjunction with a control unit, see pages 18 to 20.

Terminal block for power bases without connections

Connection	For base	Item *(2)*	Reference	Weight kg
Screw clamp terminals	LUB 120 or 320	3 + 4	**LU9B N11**	0.045

(1) Rated breaking capacity for operation on short-circuit (Ics), see table below. For higher values, use current limiters, see page 16.

Volts	**230**	**440**	**500**	**690** *(3)*
kA	50	50	10	4

(2) The various sub-assemblies are supplied assembled but they are easy to separate, as shown in the illustration.

(3) For 690 V, use phase barrier LU9 SP0.

Other versions Power bases without built-in short-circuit protection device (short-circuit protection by circuit-breaker or separate fuses).
Please consult your Regional Sales Office.

Characteristics: pages 46 to 48
Dimensions: pages 60 and 61
Schemes: pages 62 to 69

Schneider Electric

TeSys motor starters - open version

TeSys U starter-controllers

Reversing power bases

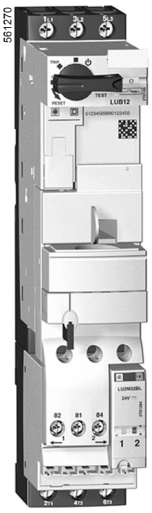

LU2B ●2

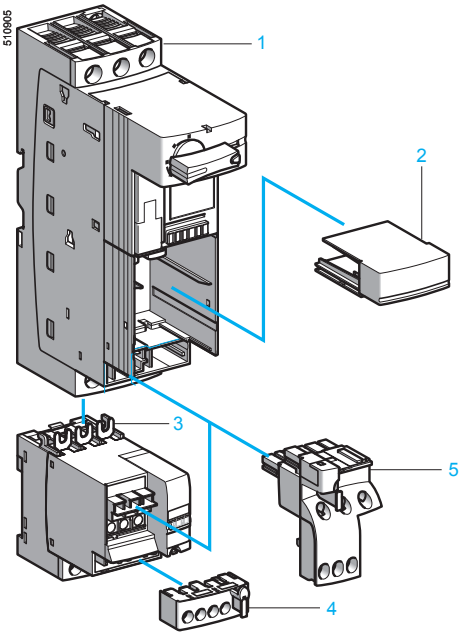

LU2B ●2

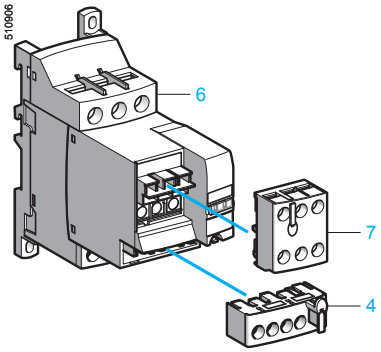

LU6M + LU9 M1 + LU9M R1

Two versions of control connection configuration are available:
- **connection by screw terminals**, plug-in control terminal block,
- **without connections**. This version enables wiring to be prepared in advance and is recommended when a communication module is required (allowing the use of control connection prewiring accessories).

Power bases for reversing D.O.L. starting, pre-assembled

Connection		Item	Rating			Reference, to be completed) *(2)*	Weight
Power	Control	*(1)*	≤ 440 V	500 V	690 V		
			A	A	A		kg
These bases have two N/O common point contacts (81-82-84) which indicate non-reversing and reversing operating status.							
Screw clamp terminals	Screw clamp terminals	1 + 2 + 3 + 4 + 5	12	12	9	**LU2B 12●●**	1.270
			32	23	21	**LU2B 32●●**	1.270
	Without connections	1 + 2 + 3 + 5	12	12	9	**LU2B A0●●**	1.270
			32	23	21	**LU2B B0●●**	1.250

Power bases for reversing D.O.L. starting for customer assembly

A reverser block should preferably be combined with a non-reversing power base without connections to create a reversing starter-controller.
The built-in N/O (13-14) and N/C (21-22) contacts are used for electrical interlocking between the reverser block and the base; they are therefore no longer available as output contacts.
The reverser block has two N/O common point contacts (81-82-84) which indicate non-reversing and reversing operating status.

32 A reverser block	Connection		Item *(1)*	Reference, to be completed) *(2)*	Weight kg
	Power	Control			
For mounting directly beneath the power base	Screw clamp terminals	Without connections	3	**LU2M B0●●**	0.400
For mounting separately from the base (screw or rail fixing)	Screw clamp terminals	Without connections	6	**LU6M B0●●**	0.425

Accessories

Description	Item	Application	Reference	Weight kg
Control terminal block	4	Reversing power base without connections LU2B A0●● or B0●●	**LU9 M1**	0.025
		Reverser block LU2M B0●● for direct mounting beneath power base	**LU9 M1**	0.025
		Reverser block LU6M B0●● for mounting separately from power base	**LU9 M1**	0.025
	7	Reverser block LU6M B0●● for mounting separately from power base	**LU9M R1**	0.030

Control circuit pre-wiring components

Description	Item	Reference	Weight kg
Pre-wired connector *(3)*	5	**LU9M R1C**	0.035

(1) The various sub-assemblies are supplied assembled but they are easy to separate, as shown in the illustration.
(2) Select the same control voltage as that of the control unit.
Standard control circuit voltages:

Volts	24	48…72	110…240
⎓	BL	–	–
∿	B	–	–
⎓ or ∿	–	ES *(4)*	FU *(5)*

(3) For control connection between a power base and a reverser block, for direct mounting.
(4) ⎓ : 48…72 V, ∿ : 48 V.
(5) ⎓ : 110…220 V, ∿ : 110...240 V.

Other versions Power bases without built-in short-circuit protection device (short-circuit protection by circuit-breaker or separate fuses). Please consult your Regional Sales Office.

Characteristics: pages 46 to 48
Dimensions: pages 60 and 61
Schemes : pages 62 to 69

TeSys motor starters - open version

TeSys U starter-controllers

Add-on contact blocks and auxiliary contact modules

Contact states depending on the product status

		Position of rotary knob	Indication on front panel	N/O pole contact	N/C pole contact	N/O contact any fault	N/C ontact any fault	⏱ N/O contact product ready
References of add-on contact blocks and auxiliary contact modules Terminal referencing		–	–	–	**LUF N11** 31-32	**LUA1 C20** 97-98	**LUA1 C11** 95-96	**LUA1 C20** 17-18
	or	–	–	–	**LUF N02** 31-32 41-42	**LUA1 C200** No terminal block	**LUA1 C110** No terminal block	**LUA1 C200** No terminal block
	or	–	–	**LUF N20** 33-34 43-44	**LUB9 N11** 21-22	–	–	**LUA1 C11** 17-18
	or	–	–	**LUF N11** 43-44	–	–	–	**LUA1 C110** No terminal block
	or	–	–	**LUB9 N11** 13-14	–	–	–	–
Off		OFF	**0**					
Ready to operate			**0**					
Start			**1**					
Tripped on short-circuit		TRIP	**I>>**					
Tripped on thermal overload	Manual reset mode	TRIP	**0**					
	Automatic reset on thermal overload fault mode		**0**					
	Remote reset mode		**0**					

N/O contact *in closed position.*

N/C contact *in open position.*

Characteristics: page 48

Schemes: page 62

TeSys motor starters - open version

TeSys U starter-controllers

Add-on contact blocks and auxiliary contact modules

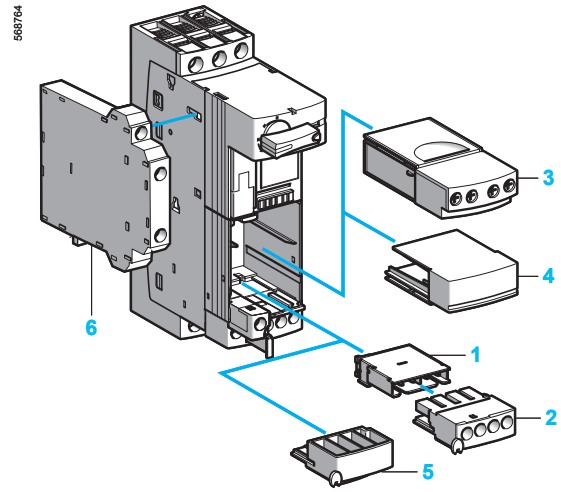

LUB + LUA1 + LUF N + LUA 8E20

References

Auxiliary contacts

Signalling and composition	Cabling	Item	Reference	Weight kg
1 N/C fault signalling contact (95-96) and 1 N/O contact (17-18) indicating rotary knob in "ready" position ⏱	Screw clamp terminals	1 + 2	**LUA1 C11**	0.030
	Without connections	1	**LUA1 C110**	0.012
1 N/O fault signalling contact (97-98) and 1 N/O contact (17-18) indicating rotary knob in "ready" position ⏱	Screw clamp terminals	1 + 2	**LUA1 C20**	0.030
	Without connections	1	**LUA1 C200**	0.012
2 N/O contacts Contacts open, rotary knob in "OFF" position ⟳ **Contacts closed, rotary knob in "ready" position** ⏱	Screw clamp terminals	6	**LUA8 E20**	0.048

Auxiliary contact modules for connection by screw clamp terminals

Module with 2 contacts indicating the status of the starter-controller power poles
Operation: ∿ or ⎓ 24…250 V, I th: 5 A

Composition	Item	Reference	Weight kg
2 N/O contacts (33-34 and 43-44)	3	**LUF N20**	0.050
1 N/C contact (31-32) and 1 N/O contact (43-44)	3	**LUF N11**	0.050
2 N/C contacts (31-32 and 41-42)	3	**LUF N02**	0.050

Accessories

Description	For use on	Item	Reference	Weight kg
Screw clamp terminal blocks	LUA1 C110	2	**LU9B C11**	0.022
	LUA1 C200	2	**LU9B C20**	0.022
Blanking covers	Location for auxiliary contact, communication or function module	4	**LU9C 1**	0.020
	Location for add-on contact blocks	5	**LU9C 2**	0.010

Characteristics: page 48
Schemes: page 62

TeSys motor starters - open version

TeSys U starter-controllers

Power connection pre-wired system, limiter blocks and accessories

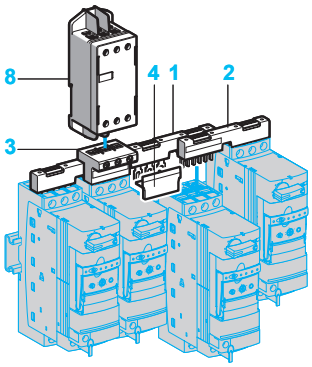

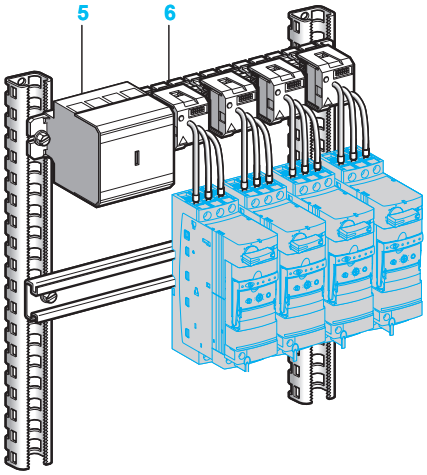

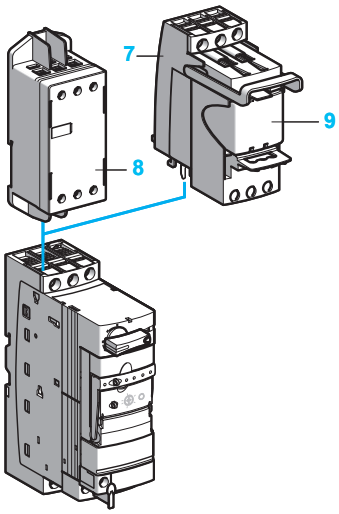

Pre-wired system for power connections up to 63 A

Description	Application	Pitch mm	Item	Sold in lots of	Unit reference	Weight kg
Sets of 3-pole 63 A busbars	2 tap-offs	45	2	1	**GV2 G245**	0.036
		54	–	1	**GV2 G254**	0.038
	3 tap-offs	45	–	1	**GV2 G345**	0.058
		54	–	1	**GV2 G354**	0.060
	4 tap-offs	45	1	1	**GV2 G445**	0.77
		54	–	1	**GV2 G454**	0.085
	5 tap-offs	54	–	1	**GV2 G554**	0.100
Protective end cover	For unused busbar outlets	–	4	5	**GV1 G10**	0.005
Terminal block for supply to one or more busbar sets	Connection from the top	–	3	1	**GV1 G09**	0.040

Pre-wired system for power connections up to 160 A

The busbar system can be screw-mounted onto any type of support.

Set of 4-pole busbars: 3-phase + neutral or 3-phase + common

Number of tap-offs at 18 mm intervals	Item	Length	For mounting in enclosure width	Reference	Weight
		mm	mm		kg
18	5	452	800	**AK5 JB144**	0.900

Removable 3-phase power sockets

Number of points used on the busbar system	Thermal current	Item	Cable lengths	Sold in lots of	Unit reference	Weight kg
2	16	6	200	6	**AK5 PC13** *(1)*	0.040
	32	6	250	6	**AK5 PC33** *(1)*	0.045
			1000	6	**AK5 PC33L** *(1)*	0.060

Limiter blocks and accessories

Application	Item	Breaking capacity Iq ≤ 440 V kA	Breaking capacity Iq 690 V kA	Mounting	Unit reference	Weight kg
Limiter-disconnector *(3) (5)*	7 + 9	130	70	Direct on power base	**LUA LB1** *(2)*	0.310
Current limiter *(3)*	8	100	35	Separate	**LA9 LB920**	0.320
Limiter cartridge	9	130	70	Limiter-disconnector	**LUA LF1**	0.135
Clip-in marker holder	–	–	–	On power base, on reverser block, on parallel link splitter box	**LAD 90** *(4)*	0.001

(1) The rated peak current for power sockets AK5 PC●● is 6 kA.
When used in association with power bases LUB●●, the prospective short-circuit current must not exceed 7 kA.
(2) Supplied with limiter cartridge.
(3) These devices make it possible to increase the breaking capacity of the power base.
(4) Sold in lots of 100.
(5) The limiter must be mounted on an LUB or LU2B power base. The limiter can therefore not be common to several motor starters.

Dimensions:
pages 60 and 61

TeSys motor starters - open version

TeSys U starter-controllers

Power connection pre-wired system, limiter blocks and accessories

568768

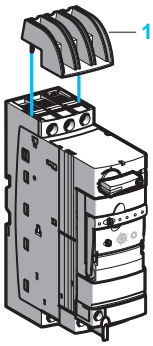

568769

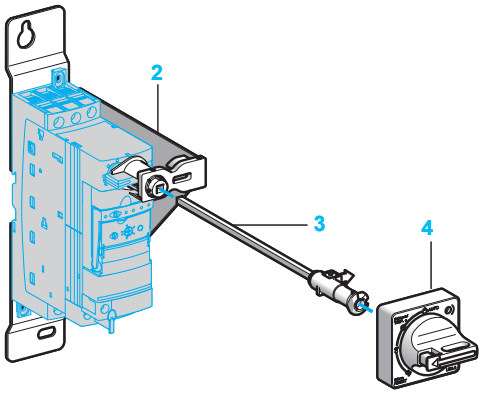

568771

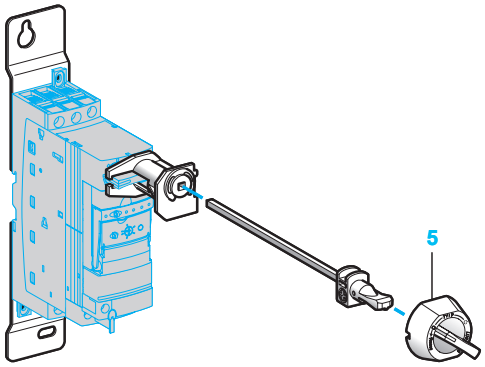

568770

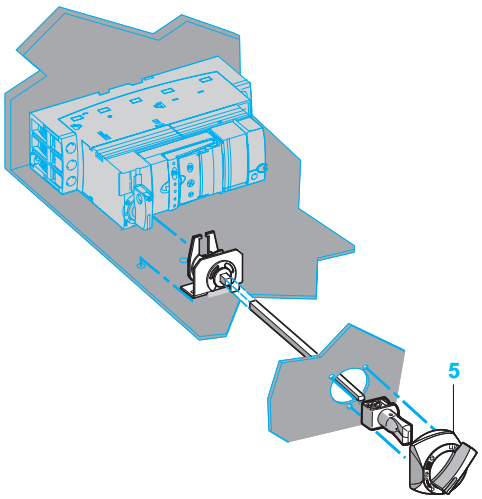

Phase barrier

Phase barrier LU9 SP0 must be used:

- To build a UL 508 **type E** certified starter (Self Protected Starter).

Without the phase barrier, the starter-controller is certified UL 508.

- If the starter-controller is to be used on an operational voltage of 690 V.

Description	Item	Application	Mounting	Reference	Weight kg
Phase barrier	1	LUB or LU2B 12 or 120 LUB or LU2B 32 or 320 LUA LB1	Direct on terminals L1, L2, L3	**LU9 SP0**	0.030

Door interlock mechanisms

Description	Item	Reference	Weight kg
Fixing kit *(1) (2)*	2 + 3	**LU9 AP00**	0.490
Door-mounted black handle on blue front plate, IP54	4	**LU9 AP11**	0.150
Door-mounted red handle on yellow front plate, IP54	4	**LU9 AP12**	0.150
Handle for mounting in the MCC drawer (Motor Control Centre)	5	**LU9 AP20**	0.096

(1) The fixing kit includes a bracket and a shaft extension (maximum depth 508 mm).
(2) To use the fixing kit with a D.O.L. reversing power base, only reverser block LU6 M must be used.

Dimensions:
pages 60 and 61

TeSys motor starters - open version
TeSys U starter-controllers
Control units

Operating characteristics

Control units	Standard	Advanced			Multifunction
	LUCA	LUCB	LUCC	LUCD	LUCM
Thermal overload protection	■	■	■	■	■
Overcurrent protection	14.2 x the setting current				3 to 17 x the setting current
Short-circuit protection	14.2 x the max. current				
Protection against phase loss	■	■	■	■	■
Protection against phase imbalance	■	■	■	■	■
Earth fault protection (equipment protection only)	■	■	■	■	■
Tripping class	10	10	10	20	5…30
Motor type	3-phase	3-phase	Single-phase	3-phase	Single-phase and 3-phase
Thermal overload test function		■	■	■	■
Overtorque					■
No-load running					■
Long starting time					■
Reset method Manual	■	■	■	■	Parameters can be set
Automatic or remote		With function module, or parameters can be set via the bus with a communication module, see chart below.			Parameters can be set
					Parameters can be set via the bus with a communication module (see below).
Alarm		Thermal overload alarm only with function module or communication module, see below.			Possible for each type of fault. Indication on front panel of the control unit, via remote terminal, via PC or via PDA *(1)*.
					With communication modules to make use of these alarms via a bus, see below.
"Log" function					Log of the last 5 trips. Number of starts, number of trips, number of operating hours.
"Monitoring" function					Display of main motor parameters on front panel of the control unit, via remote terminal, via PC or via PDA *(1)*.

With function modules *(2)*

Thermal overload alarm		With module LUF W			
Thermal overload signalling and manual reset		With module LUF DH11			
Thermal overload signalling and automatic or remote reset		With modules LUF DA01 and LUF DA10			
Indication of motor load (analogue)		With module LUF V			

With communication module or via Modbus port on control unit LUCM *(2)*

Starter status (ready, running, fault)	With any communication module				
Reset method		Parameters can be set via the bus			
Alarm		With modules LUL C031, LUL C033, LUL C15, LUL C07, LUL C08 and LUL C09 (thermal overload alarm only).			With module LUL C031, LUL C033, LUL C15, LUL C07, LUL C08 and LUL C09 and Modbus port on the control unit (alarm possible for all types of fault).
Remote reset via the bus					
Indication of motor load					
Fault signalling and differentiation					
Remote programming and monitoring of all functions					With modules LUL C031, LUL C033, LUL C15, LUL C07, LUL C08 and LUL C09 and Modbus port on the control unit.
"Log" function					
"Monitoring" function					

■ *Built-in function* ■ *Function provided with accessory*

(1) PDA: Personal Digital Assistant.
(2) Mounting possibilities: 1 function module or *1 communication module.*

TeSys motor starters - open version

TeSys U starter-controllers

Standard and advanced control units

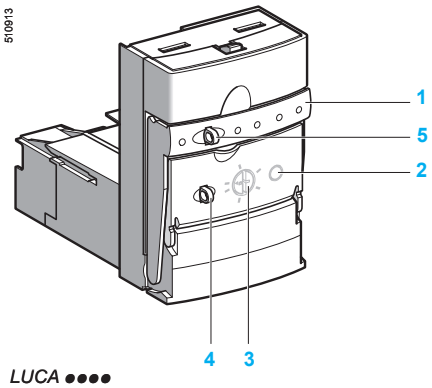

LUCA ●●●●
LUCB ●●●●

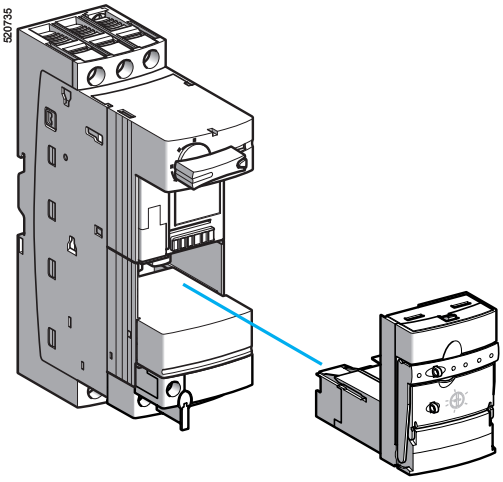

LUB ●2 + LUCA ●●●●

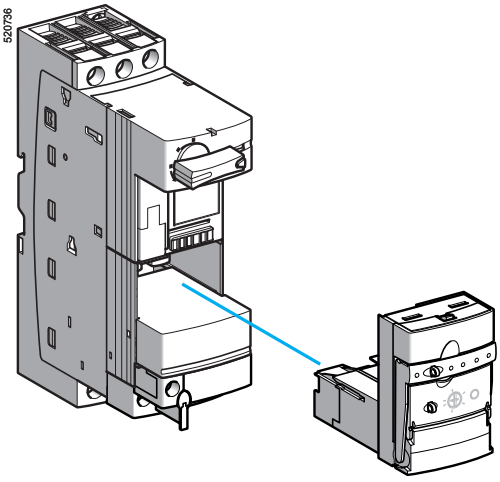

LUB ●2 + LUCB ●●●●

Description

1 Extraction and locking handle
2 Test button (on advanced control unit only)
3 Ir adjustment dial
4 Locking of settings by sealing the transparent cover
5 Sealing of locking handle

Standard control units

Maximum standard power ratings of 3-phase motors 50/60 Hz			Setting range	Clip-in mounting on power base Rating	Reference, to be completed by adding the voltage code *(1)*	Weight
400/440 V	500 V	690 V				
kW	kW	kW	A	A		kg
Class 10 for 3-phase motors						
0.09	–	–	0.15…0.6	12 and 32	**LUCA X6●●**	0.135
0.25	–	–	0.35…1.4	12 and 32	**LUCA 1X●●**	0.135
1.5	2.2	3	1.25…5	12 and 32	**LUCA 05●●**	0.135
5.5	5.5	9	3…12	12 and 32	**LUCA 12●●**	0.135
7.5	9	15	4.5…18	32	**LUCA 18●●**	0.135
15	15	18.5	8…32	32	**LUCA 32●●**	0.135

Advanced control units

Pressing the Test button on the front panel simulates tripping on thermal overload.

Class 10 for 3-phase motors						
0.09	–	–	0.15…0.6	12 and 32	**LUCB X6●●**	0.140
0.25	–	–	0.35…1.4	12 and 32	**LUCB 1X●●**	0.140
1.5	2.2	3	1.25…5	12 and 32	**LUCB 05●●**	0.140
5.5	5.5	9	3…12	12 and 32	**LUCB 12●●**	0.140
7.5	9	15	4.5…18	32	**LUCB 18●●**	0.140
15	15	18.5	8…32	32	**LUCB 32●●**	0.140
Class 10 for single-phase motors						
–	–	–	0.15…0.6	12 and 32	**LUCC X6●●**	0.140
0.09	–	–	0.35…1.4	12 and 32	**LUCC 1X●●**	0.140
0.55	–	–	1.25…5	12 and 32	**LUCC 05●●**	0.140
2.2	–	–	3…12	12 and 32	**LUCC 12●●**	0.140
4	–	–	4.5…18	32	**LUCC 18●●**	0.140
7.5	–	–	8…32	32	**LUCC 32●●**	0.140
Class 20 for 3-phase motors						
0.09	–	–	0.15…0.6	12 and 32	**LUCD X6●●**	0.140
0.25	–	–	0.35…1.4	12 and 32	**LUCD 1X●●**	0.140
1.5	2.2	3	1.25…5	12 and 32	**LUCD 05●●**	0.140
5.5	5.5	9	3…12	12 and 32	**LUCD 12●●**	0.140
7.5	9	15	4.5…18	32	**LUCD 18●●**	0.140
15	15	18.5	8…32	32	**LUCD 32●●**	0.140

(1) Standard control circuit voltages:

Volts	24	48…72	110…240
⎓	BL *(2), (3)*	–	–
∿	B	–	–
⎓ or ∿	–	ES *(4)*	FU *(5)*

(2) Voltage code to be used for a starter-controller with communication module.
(3) d.c. voltage with maximum ripple of ± 10 %.
(4) ⎓ : 48…72 V, ∿ : 48 V.
(5) ⎓ : 110…220 V, ∿ : 110...240 V.

Characteristics: pages 46 and 49
Schemes: page 63

TeSys motor starters - open version
TeSys U starter-controllers
Multifunction control units

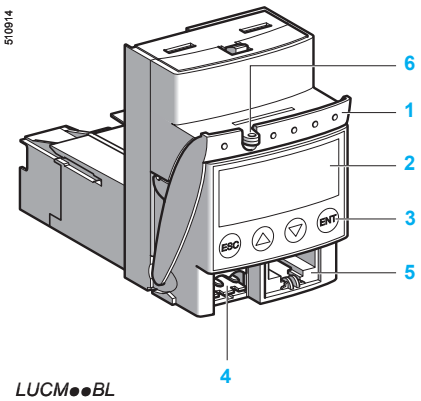

LUCM●●BL

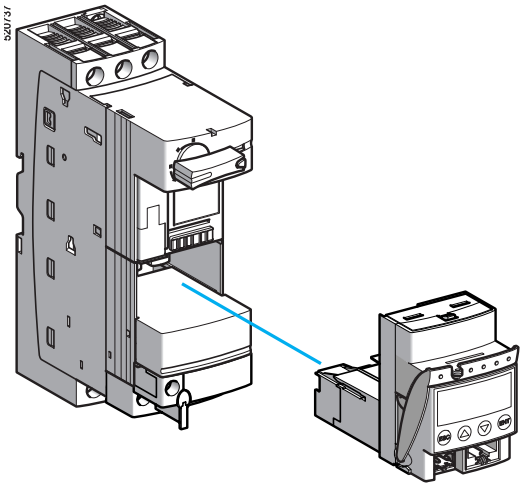

LUB ●2 + LUCM ●●BL

XBT NU400

Description

1 Extraction and locking handle
2 Built-in display window (2 lines, 12 characters)
3 4-button keypad
4 ⎓ 24 V auxiliary power supply
5 Modbus RS485 communication port. Connection by RJ45 connector.
6 Sealing of locking handle

The display window 2 and keypad 3 allow:
- in configuration mode: local configuration of protection functions and alarms,
- in run mode: display of parameter values and events.

The Modbus communication port 5 is used to connect:
- an operator terminal,
- a PC,
- a Personal Digital Assistant (PDA).

Multifunction control units

Parameter entry, monitoring of parameter values and consultation of logs are carried out:
- either on the front panel, using the built-in display window/keypad,
- or via an operator terminal,
- or via a PC or a PDA with PowerSuite software,
- or remotely, via a Modbus communication bus.

Programming of the product via the keypad requires a ⎓ 24 V auxiliary power supply.

Maximum standard power ratings of 3-phase motors 50/60 Hz			Setting range	Clip-in mounting on power base Rating	Reference *(1)*	Weight
400/415 V	500 V	690 V				
kW	kW	kW	A	A		kg
0.09	–	–	0.15…0.6	12 and 32	**LUCM X6BL**	0.175
0.25	–	–	0.35…1.4	12 and 32	**LUCM 1XBL**	0.175
1.5	2.2	3	1.25…5	12 and 32	**LUCM 05BL**	0.175
5.5	5.5	9	3…12	12 and 32	**LUCM 12BL**	0.175
7.5	9	15	4.5…18	32	**LUCM 18BL**	0.175
15	15	18.5	8…32	32	**LUCM 32BL**	0.175

TeSys U user's manual *(2)*

Application	Language	Reference	Weight kg
On CD-Rom	Multi-language *(3)*	**LU9 CD1**	0.022

HMI terminal

This compact Magelis terminal enables the parameters of multifunction control unit LUCM to be read and modified.
It is supplied pre-configured to provide dialogue with 8 TeSys U starter-controllers (Modbus protocol, application pages and alarm pages loaded).
Starter-controller alarm and fault management takes priority.

Language	Display window	Supply voltage	Reference	Weight kg
Multi-language *(3)*	4 lines of 20 characters	⎓ 24 V	**XBT NU400**	0.150

Connecting cable *(4)*

Function	Length	Type	Reference	Weight kg
Connects terminal XBT NU400 to a multifunction control unit.	2.5 m	SUB-D 25-way female - RJ45	**XBT Z938**	0.200

(1) Input voltage ⎓ 24 V with maximum ripple of ± 10 %.
(2) The CD-Rom contains user's manuals for the AS-Interface and Modbus communication modules, multifunction control units and gateway modules, as well as the gateway programming software.
(3) English, French, German, Italian, Spanish
(4) If a terminal is used with several control units, this cable can be connected to a Modbus hub or to T-junctions (see page 43).

Characteristics: pages 46 and 49
Schemes: pages 62 to 65

TeSys motor starters - open version
TeSys U starter-controllers
Function modules

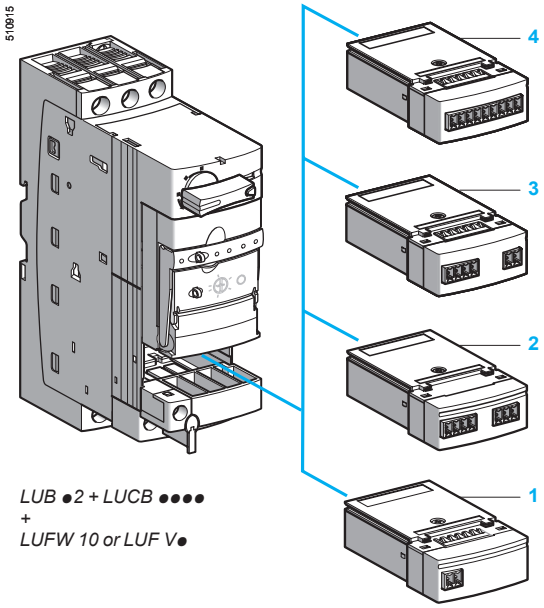

LUB ●2 + LUCB ●●●●
+
LUFW 10 or LUF V●

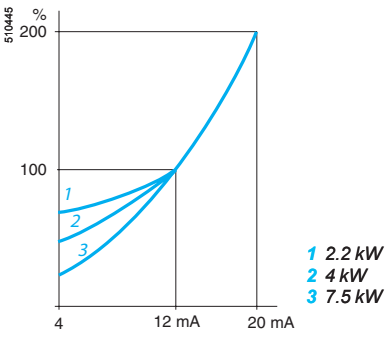

1 2.2 kW
2 4 kW
3 7.5 kW

Function modules

Output	Item	Application	Reference	Weight kg
Thermal overload signalling and manual reset				
Module LUF DH11 makes it possible to differentiate thermal overload and short-circuit faults. (The short-circuit fault can then be signalled via add-on contact blocks LUA1 C). The module includes two contacts for thermal overload signalling, as well as an LED on the front panel. To reset the motor starter, the operator must use the rotary knob on the power base. The module can only be used with an advanced control unit and requires an ∿/⎓ 24…240 V external power supply.				
1 N/O + 1 N/C	3	∿ or ⎓ 24…250 V	**LUF DH11**	0.060
Thermal overload signalling and automatic or remote reset				
These modules make it possible to differentiate thermal overload and short-circuit faults. (The short-circuit fault can then be signalled via add-on contact blocks LUA1 C). The modules include one contact for thermal overload signalling, as well as an LED on the front panel. A second contact (terminals Z1-Z2) must be wired in series with terminal A1 of the motor starter. In the event of a thermal overload fault, this wiring allows motor control to be switched off. The rotary knob on the power base will then stay in the "ready position" ⏻. Resetting of the motor starter is automatic after the required motor cooling time if terminals X1-X2 are linked by a strap, or remote by pulsed closing of a volt-free contact connected to terminals X1-X2. These modules can only be used with an advanced control unit and require an ∿/⎓ 24…240 V external power supply. ***Note:*** *Terminals X1-X2 are not isolated from the signalling module power supply. For remote resetting, use a volt-free contact specific to each module to be reset.*				
1 N/C	4	∿ or ⎓ 24…250 V	**LUF DA01**	0.055
1 N/O	4	∿ or ⎓ 24…250 V	**LUF DA10**	0.055
Thermal overload alarm				
Through load shedding, this module makes it possible to avoid stoppages in operation due to overload tripping. Imminent thermal overload tripping is displayed as soon as the thermal state exceeds the threshold of 105 % (hysteresis = 5 %). Signalling is possible via an LED on the front panel of the module and externally by an N/O relay output. It can only be used with an advanced control unit, from which it takes its power.				
1 N/O	1	∿ or ⎓ 24…250 V	**LUF W10**	0.055
Indication of motor load				
This module provides a signal which is representative of the motor load status (I average/Ir). ■ I average = average value of the rms currents in the 3 phases, ■ Ir = value of the setting current. The value of the signal (4-20 mA) corresponds to a load status of 0 to 200 % (0 to 300 % for a single-phase load). It can be used with an advanced or multifunction control unit. Module LUF V2 requires a ⎓ 24 V external power supply.				
4 - 20 mA	2	–	**LUF V2**	0.050

Characteristics: pages 46 and 51
Schemes: page 64

PowerSuite software workshop

534513

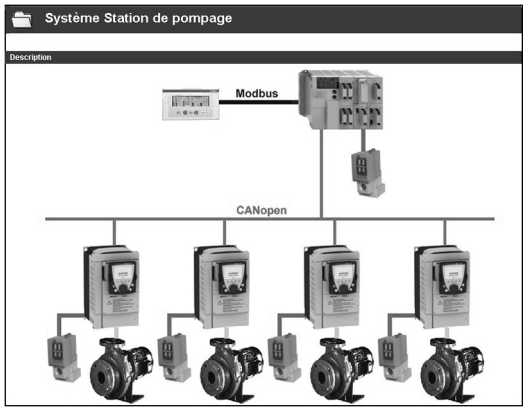

PowerSuite screen on PC

Presentation

The PowerSuite software workshop for PC is a user-friendly tool designed for setting up the Schneider Electric control device motors:
- TeSys U starter-controllers
- TeSys T motor management systems
- Altistart soft start/soft stop units
- Altivar variable speed drives
- Lexium 05 servo drives

It includes various functions designed for setup phases such as:
- Preparing configurations
- Start-up
- Maintenance

To facilitate start-up and maintenance, the PowerSuite software workshop is compatible with the Bluetooth® wireless link.

Functions *(1)*

Preparing configurations

The PowerSuite software workshop can be used on its own to generate the device configuration, which can be saved, printed and exported to office automation software.

The PowerSuite software workshop can also be used to convert an Altivar 58 or Altivar 58F drive configuration into one that is compatible with an Altivar 71.

533181

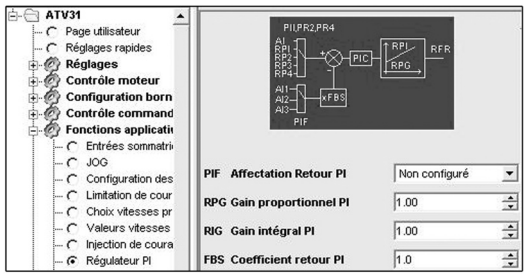

PowerSuite screen on PC
View of PI regulator function parameters

Start-up

When the PC is connected to the device, the PowerSuite software workshop can be used to:
- Transfer the generated configuration
- Adjust
- Monitor. This option has been enhanced with new functions such as:
  - The oscilloscope
  - The high-speed oscilloscope (minimum time base: 2 ms)
  - The FFT *(Fast Fourier Transform)* oscilloscope
  - Display of communication parameters
- Control
- Save the final configuration

Maintenance

To facilitate maintenance operations, the PowerSuite software workshop can be used to:
- Compare the configuration of a device currently being used with a saved configuration
- Manage the user's installed equipment base, in particular:
  - Organize the installed base into folders (electrical equipment, machinery, workshops, etc.)
  - Store maintenance messages
  - Facilitate Modbus TCP connection by storing the IP address

572706

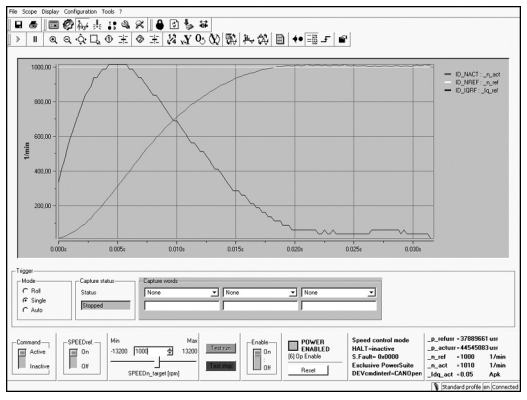

View of the FTT oscilloscope

User interface

The PowerSuite software workshop can be used to:
- Present the device parameters (arranged by function) in the form of illustrated views of diagrams or simple tables
- Customize the parameter names
- Create:
  - A user menu (choice of particular parameters)
  - Monitoring control panels with graphic elements (cursors, gauges, bar charts)
- Perform sort operations on the parameters
- Display text in five languages (English, French, German, Italian and Spanish). The language changes immediately and there is no need to restart the program.

It also features online contextual help:
- On the PowerSuite tool
- On the device functions by direct access to the user manuals

(1) Certain functions are not available for all devices. See the table of available functions, page 23.

References:
page 24

Schneider Electric

PowerSuite software workshop

Functions available for the PowerSuite software workshop

Functions not listed in the table are available for all devices.

Function available with devices	Controller	Starter-controller	Soft start/ soft stop unit	Drives				Servo drive
	TeSys T	TeSys U	ATS 48	ATV 11	ATV 31	ATV 61	ATV 71	LXM 05
Monitoring	■	■	■	■	■	■	■	■
Oscilloscope	■	■	■	■	■	■	■	■
High-speed oscilloscope	■	■	■	■	■	■	■	■
FFT oscilloscope	■	■	■	■	■	■	■	■
Display of communication parameters	■	■	■	■	■	■	■	■
Control	■	■	■	■	■	■	■	■
Customization of parameter names	■	■	■	■	■	■	■	■
Creation of a user menu	■	■	■	■	■	■	■	■
Creation of monitoring control panels	■	■	■	■	■	■	■	■
Sort operation on parameters	■	■	■	■	■	■	■	■
Custom logic editor	■	■	■	■	■	■	■	■

■ Functions available
■ Functions not available

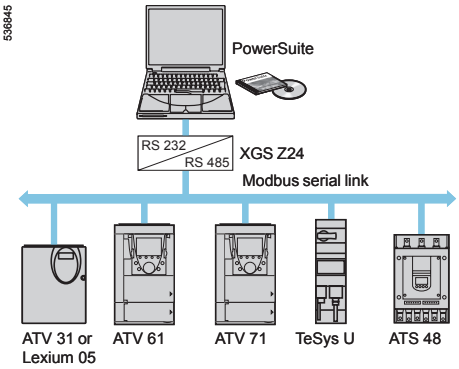

Modbus multidrop connection

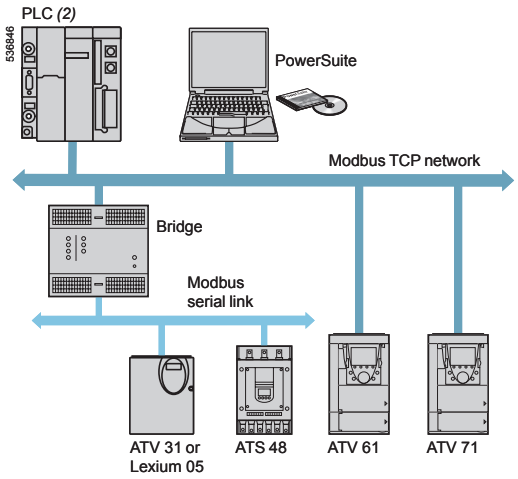

Modbus TCP connection

Connections (1)

Modbus serial link

The PowerSuite software workshop can be connected directly to the device terminal port or Modbus network port via the serial port on the PC.

Two types of connection are possible:
- With a single device (point-to-point connection), use a VW3 A8 106 PC serial port connection kit.
- With a number of devices (multidrop connection), use the XGS Z24 interface.

Modbus TCP communication network

The PowerSuite software workshop can be connected to a Modbus TCP network. In this case, the devices can be accessed:
- Using a VW3 A3 310 communication card for the Altivar 61and 71 drives
- Using a TSX ETG 100 Modbus TCP/Modbus gateway

Bluetooth® wireless link

The PowerSuite software workshop can communicate via a Bluetooth® radio link if the device is equipped with a Bluetooth® Modbus VW3 A8 114. The adapter plugs into the device connector terminal port or Modbus network port and has a range of 10 m (class 2).

If the PC does not feature Bluetooth® technology, use the VW3 A8 115 USB - Bluetooth® adapter.

Remote maintenance

A simple Modbus TCP connection is all that is required for the PowerSuite software workshop to support remote monitoring and diagnostics.
When devices are not connected to the Modbus TCP network, or it is not directly accessible, various remote transmission solutions may be used instead (modem, teleprocessing gateway, etc.). Please consult your Regional Sales Office.

(1) Please refer to the compatibility table on page 25.
(2) Please refer to our specialist "Automation platform Modicon Premium and Unity - PL7 software" and "Automation platform Modicon M340" catalogues.

Presentation: page 22
References: page 24

PowerSuite software workshop

PowerSuite software workshop

536848

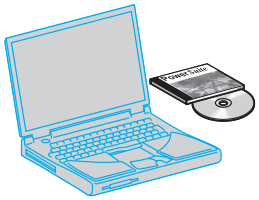

VW3 A8 104

536847

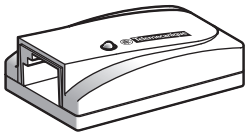

VW3 A8 114

Description	Composition	Reference	Weight kg
PowerSuite CD-ROM	■ 1 program for PC in English, French, German, Italian and Spanish ■ Variable speed drive, starter and servo drive technical manuals	**VW3 A8 104**	0.100
PowerSuite update CD-ROM *(1)*	■ 1 program for PC in English, French, German, Italian and Spanish ■ Variable speed drive and starter technical manuals	**VW3 A8 105**	0.100
PC serial port connection kit for point-to-point Modbus connection	■ 1 x 3 m cable with 1 RJ45 connector on starter-controller or drive side and 1 RS 232/RS 485 converter with 1 9-way female SUB-D connector on PC side ■ For the ATV 11 drive: 1 converter with one 4-way male SUB-D connector and 1 RJ45 connector ■ For ATV 38/58/58F drives: 1 RJ45/9-way male SUB-D adapter	**VW3 A8 106**	0.350
RS 232/RS 485 interface for multidrop Modbus connection	■ 1 Modbus multidrop converter for connection to screw terminals. Requires a 24 V ⎓ (20...30 V), 20 mA power supply *(2)*	**XGS Z24**	0.105
Modbus-Bluetooth® adapter *(3)*	■ 1 Bluetooth® adapter (10 m range, class 2) with 1 RJ45 connector ■ For PowerSuite: 1 x 0.1 m cable with 2 RJ45 connectors ■ For TwidoSoft: 1 x 0.1 m cable with 1 RJ45 connector and 1 mini DIN connector ■ For ATV 38/58/58F drives: 1 RJ45/9-way male SUB-D adapter	**VW3 A8 114**	0.155
USB - Bluetooth® adapter for PC	This adapter is required in the case of a PC that does not feature Bluetooth® technology. It is connected to a USB port on the PC. 10 m range (class 2)	**VW3 A8 115**	0.290

(1) Updates a version ≥ V1.40 with the latest available version. For versions < V1.40, you should order the PowerSuite CD-Rom, VW3 A8 104.
(2) Please refer to the "Interfaces, I/O splitter boxes and power supplies" catalogue.
(3) Can also be used to communicate between a Twido PLC and the TwidoSoft software workshop.

Presentation: page 22
Fonctions: page 22

Compatibilité de l'atelier logiciel PowerSuite avec les appareils *(1)*

Connexion	Controller	Starter-controller	Soft start/ soft stop unit	Drives				Servo drives		
	TeSys T	TeSys U *(2)*	ATS 48	ATV 11	ATV 31	ATV 61	ATV 71	LXM 05A	LXM 05B	LXM 05C
Modbus	V2.5	V1.40	V1.30	V1.40	V2.0	V2.3	V2.2	V2.2	V2.4	V2.5
Modbus TCP (device equipped with Modbus TCP card)						V2.3	V2.2			
Modbus TCP via Modbus TCP/Modbus gateway			V1.50		V2.0	V2.3	V2.2	V2.2	V2.4	V2.5
Bluetooth®			V2.2		V2.2	V2.3	V2.2	V2.2	V2.4	V2.5

Compatible software versions
Incompatible software versions

Hardware and software environments

The PowerSuite software workshop can operate in the following PC environments and configurations:

- Microsoft Windows® XP SP1, SP2,
- Pentium III, 800 MHz, hard disk with 300 MB available, 128 MB RAM
- SVGA or higher definition monitor

(1) Minimum software version.
(2) TeSys U starter-controller without communication module or with Modbus LUL C031 or LUL C033 communication module.

TeSys motor starters - open version

TeSys U starter-controllers

Parallel wiring module and pre-wired coil connection components

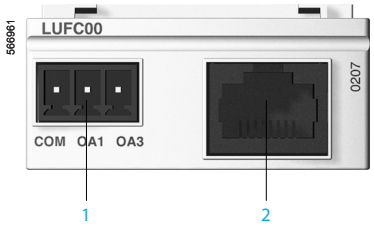

1 Outputs for starter commands
2 RJ45 connector for connecting to splitter box

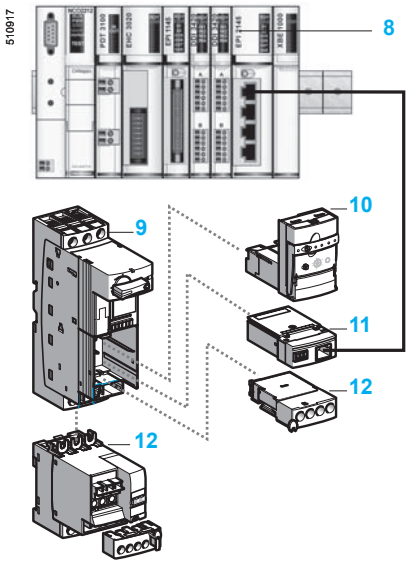

8 Dedicated parallel interface module (STB EPI 2145)
9 Power base
10 ⎓ 24 V control unit (LUC B/D/C/M ●● BL)
11 Parallel wiring module (LUF C00),
12 Options: add-on contact blocks, reverser blocks

Presentation

The parallel wiring system makes it possible to connect starter-controllers to the PLC I/O modules quickly and without any need for tools. It replaces traditional screw terminal and single wire connections. It is used with the Telefast pre-wired system *(1)*.
The parallel wiring module provides the status and command information for each starter-controller. It must be used with an LUB ●● or LU2B ●●BL power base and a ⎓ 24 V control unit LUC● ●●BL.
Splitter box LU9 G02 distributes information from the PLC I/O modules to each of the starter-controllers connected to it.
This splitter box is optimised for use with card TSX DMZ28DTK.

When used in conjunction with the Advantys STB distributed I/O solution, the TeSys U starter-controller is ideal in decentralised automation architectures *(2)*.
The use of dedicated parallel interface module STB EPI 2145 allows remote connection of 4 starter-controllers.

Each of the module's 4 channels has:
- 2 outputs: control of starter forward and reverse running,
- 3 inputs: position of the rotary knob, fault indication and position of the poles.

Connection to the dedicated module is by means of the following cables:
- RJ45 LU9R●●, for lengths less than 3 metres,
- 490 NTW 000●●, for lengths greater than 3 metres.

Parallel type connection

Architecture

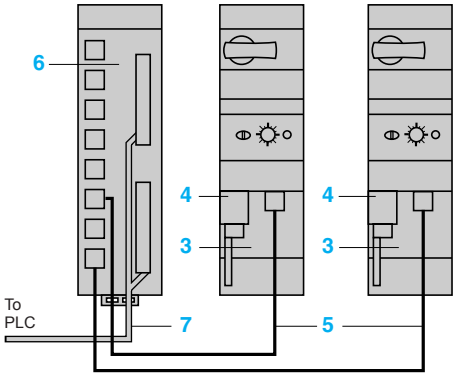

3 Parallel wiring module LUF C00
4 Pre-wired coil connection LU9B N11C
5 Connection cable LU9 R● with one RJ45 connector at each end
6 Splitter box LU9 G02 for 8 motor starters with channel connections on the PLC side by 2 HE 10 connectors and on the starter-controller side by 8 RJ45 connectors.
7 Connection cable TSX CDP●●● with one HE 10 connector at each end.

References

Description	Item	Reference	Weight kg
Parallel wiring module	**3**	**LUF C00**	0.045

(1) Please consult our "Power Control and connection components catalogue".
(2) Please consult our "IP 20 distributed inputs/outputs Advantys STB" catalogue.

TeSys motor starters - open version

TeSys U starter-controllers

Parallel wiring module and pre-wired coil connection components

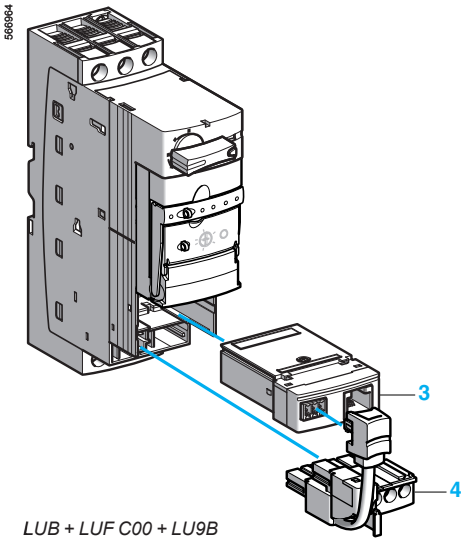

LUB + LUF C00 + LU9B

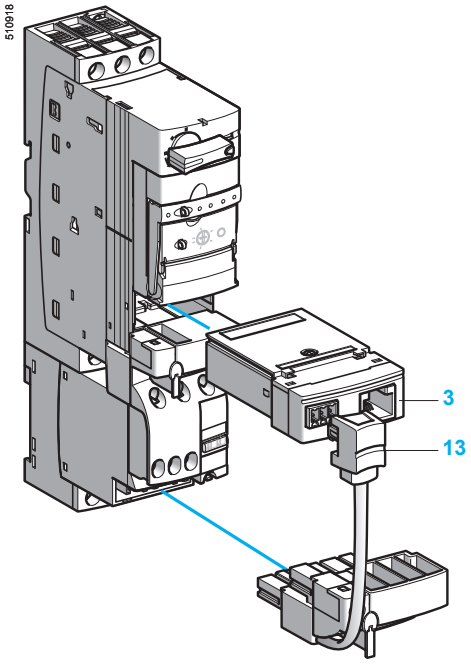

LU2B + LUF C00 + LU9M

Pre-wired components simplify wiring and reduce wiring errors.

Connection of communication module output terminals to the coil terminals

By pre-wired connector or wire link.

■ **Pre-wired connector: pre-wired coil connection**

The use of a power base without pre-wired connections is recommended.

Description	For use with power base	Item	Reference	Weight kg
Pre-wired coil connection	LUB●●	4	**LU9B N11C**	0.045
	LU2B●●	13	**LU9M RC**	0.030

■ **Wire link:**

Allows insertion, for example, of an Emergency Stop control or a voltage interface. This type of connection must be used for a reversing starter-controller assembled using an LU6M reverser block for separate mounting. When reverser block LU6M and the power base are mounted side-by-side, a pre-wired coil connection LU9M RC may be used.

Connection of parallel wiring module to the PLC

No tools are required to connect the parallel wiring module to the PLC. Connection is via a splitter box which allows up to 8 starter-controllers to be connected; a maximum of 4 reversing starters per splitter box is allowed.
The splitter box requires a ⎓ 24 V power supply.

Splitter block			
Connectors		**Reference**	**Weight**
PLC side (16I/12O)	**Starter-controller side**		**kg**
2 x HE 10 20-way	**8 x RJ45**	**LU9 G02** *(1)*	0.260

Connection cables to the splitter box				
Connectors	**Item**	**Length m**	**Reference**	**Weight kg**
2 x RJ45 connectors	5	0.3	**LU9 R03**	0.045
		1	**LU9 R10**	0.065
		3	**LU9 R30**	0.125

Connection cables from splitter box to PLC						
Type of connection		**Gauge**	**C.s.a.**	**Length**	**Reference**	**Weight**
PLC side	**Splitter box side**					
		AWG	**mm²**	**m**		**kg**
HE 10 20-way	**HE 10 20-way**	22	0.324	0.5	**TSX CDP 053**	0.085
				1	**TSX CDP 103**	0.150
				2	**TSX CDP 203**	0.280
				3	**TSX CDP 303**	0.410
				5	**TSX CDP 503**	0.670
		28	0.080	1	**ABF H20 H100**	0.080
				2	**ABF H20 H200**	0.140
				3	**ABF H20 H300**	0.210
Bare wires	**HE 10 20-way**	22	0.324	3	**TSX CDP 301**	0.400
				5	**TSX CDP 501**	0.660

(1) Allows "run" and "fault" status of each starter-controller to be fed back to the PLC and transmits commands.

Characteristics:
pages 46 and 51

TeSys motor starters - open version

TeSys U starter-controllers

AS-Interface communication modules

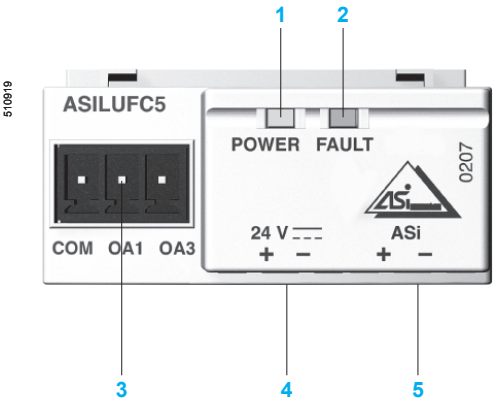

1 Green LED: AS-Interface voltage present
2 Red LED: AS-Interface or module fault
3 Outputs for starter commands
4 Black connector for connection to ⎓ 24 V auxiliary power supply
5 Yellow connector for connection to the AS-Interface system

Presentation

AS-Interface communication modules ASILUF C5 and ASILUF C51 make it easy to connect starter-controllers to the AS-Interface cabling system, and therefore allow remote control and command of these starter-controllers.

Module ASILUF C51 features extended addresing.

The various operating states of the modules (AS-Interface voltage present, communication fault, addressing fault,…) are indicated on the front panel by a green LED 1 and a red LED 2.

Operation of the modules is continuously monitored by auto-testing, in a way that is totally transparent to the user.

The incorporation of AS-Interface V.2.1 functions allows diagnostics to be performed on the modules, either remotely via the line or locally via the ASI TERV2 addressing terminal.

The communication modules must be connected to a ⎓ 24 V auxiliary supply and must be used in conjunction with a ⎓ 24 V control unit, LUC● ●●BL.
The product is supplied with a yellow connector 4 for connection to the AS-Interface system, a black connector 5 for connection to the ⎓ 24 V auxiliary supply and a black connector 3 for connection of the outputs.

Series type connection

Architecture

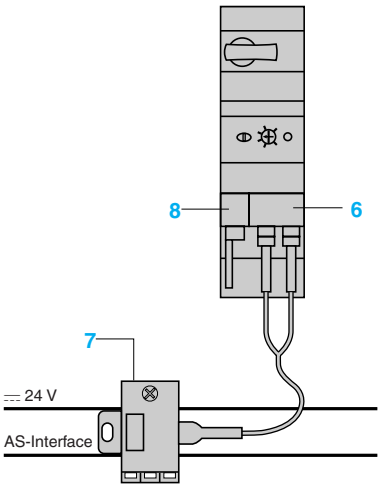

6 Communication modules ASILUF C5 or ASILUF C51
7 Tap-off XZ CG0142
8 Pre-wired coil connection LU9B N11C

Information transmitted by the AS-Interface system

AS-Interface profiles		7.D.F.0 profile and 7.A.7.E profile	
Data bits (command)	Bit value	= 0	= 1
	Command D0 (O)	Stop forward	Forward running
	Command D1 (O)	Stop reverse	Reverse running
	Command D2 (O)	Not used	Not used
	Command D3 (O)	Not used	Not used
Data bits (status)	Bit value	= 0	= 1
	Status D0 (I)	Not ready or fault	Ready
	Status D1 (I)	Stopped	Running
	Status D2 (I)	Not used	Not used
	Status D3 (I)	Not used	Not used

References

Description	Addressing	Item	Reference	Weight kg
Communication modules	Single 31 slaves	6	**ASI LUF C5**	0.065
	Extended 62 slaves	6	**ASI LUF C51**	0.065

TeSys motor starters - open version
TeSys U starter-controllers
AS-Interface communication modules

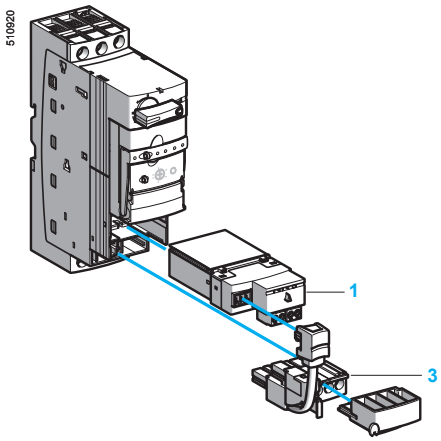

LUB + ASILUF C5 + LU9B

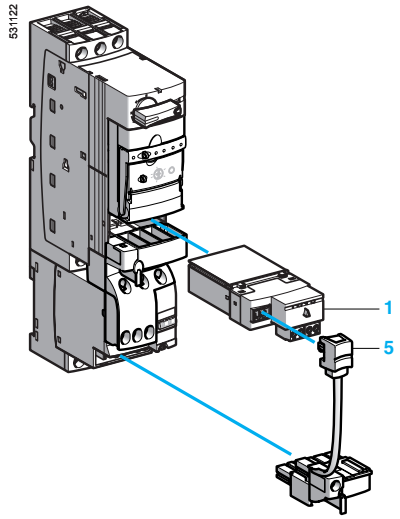

LU2B + ASILUF C5 + LU9M

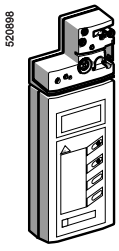

XZ MC11

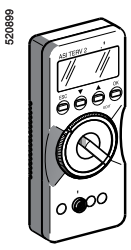

ASI TERV2

Pre-wired components simplify wiring and reduce wiring errors.

Connection of communication module output terminals to the coil terminals

By pre-wired connector or wire link.

■ **Pre-wired connector: pre-wired coil connection**

The use of a power base without pre-wired control circuit connections is recommended.

Description	For use with power base	Item	Reference	Weight kg
Pre-wired coil connection	LUB ●●	3	**LU9B N11C**	0.045
	LU2B ●●	5	**LU9M RC**	0.030

■ **Wire link**

Allows insertion, for example, of an emergency Stop control or a voltage interface. This type of connection must be used for a reversing starter-controller assembled using an LU6M reverser block for separate mounting. When reverser block LU6M and the power base are mounted side-by-side, a pre-wired coil connection LU9M RC may be used.

Connection of the communication module *(1)*

This is achieved by using a tap-off for connection to 2 ribbon cables:
- 1 for AS-Interface (yellow).
- 1 for separate ⎓ 24 V supply (black).

Description	Length m	Reference	Weight kg
Tap-off	2	**XZ CG0142**	0.265

Consoles and cable adapter

Description	Reference	Weight kg
Addressing terminal Battery operated. Battery charger supplied AS-Interface V.1 and V.2.1 compatible	**XZ MC11**	0.550
Adjustment and diagnostics console Runs on LR6 batteries Allows addressing of AS-Interface V.2.1 slaves and diagnostics	**ASI TERV2**	0.500
Cable adapter For console XZ MC11	**XZ MG12**	0.070

Software set-up

AS-Interface configuration is carried out using PL7 Micro/Junior/Pro software. From the module declaration screen, it is possible to configure all the slave devices corresponding to all the AS-Interface I/O.
Configuration is carried out by following the instructions on the screen.

TeSys U user's manual *(2)*

Application	Language	Reference	Weight kg
On CD-Rom	Multi-language *(3)*	**LU9 CD1**	0.022

(1) Degree of protection IP 54. Connection by 4 x 0.34 mm² wires.
Black wire: + 24 V.
White wire: 0 V.
Blue wire: AS-Interface (–).
Brown wire: AS-Interface (+).
(2) The CD-Rom contains user's manuals for the AS-Interface and Modbus communication modules, multifunction control units and gateway modules, as well as the gateway programming software.
(3) English, French, German, Italian, Spanish

TeSys motor starters - open version

TeSys U starter-controllers

Profibus DP communication module and pre-wired coil connection components

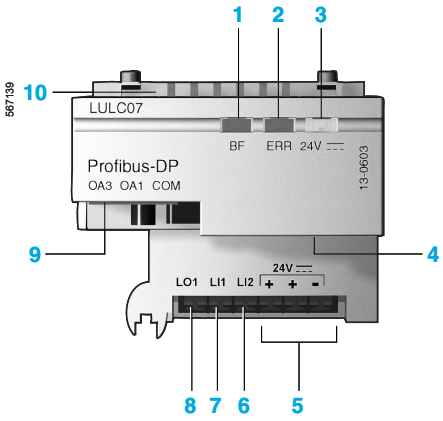

1 LED indicating module status
2 Fault signalling LED
3 LED indicating ⎓ 24 V supply ON for outputs OA1, OA3 and LO1
4 SUB-D connector for bus link
5 ⎓ 24 V supply connection
6 Discrete input
7 Discrete input
8 Discrete output
9 Outputs for starter-controller commands (non-reversing and reversing)
10 Pin for connection to control unit (advanced or multifunction)

Presentation

When used in conjunction with the power base and control unit, communication module LULC07 allows TeSys U starter-controllers to be controlled via Profibus DP (Deported Periphery).
Communication module LULC07 is of the slave type and uses the TeSys U system's internal registers (which can be accessed via the Profibus DP bus) in cyclic or acyclic mode. This module has a 24 V (0.5 A) discrete output and two configurable discrete inputs.

Connections

Serial bus topology

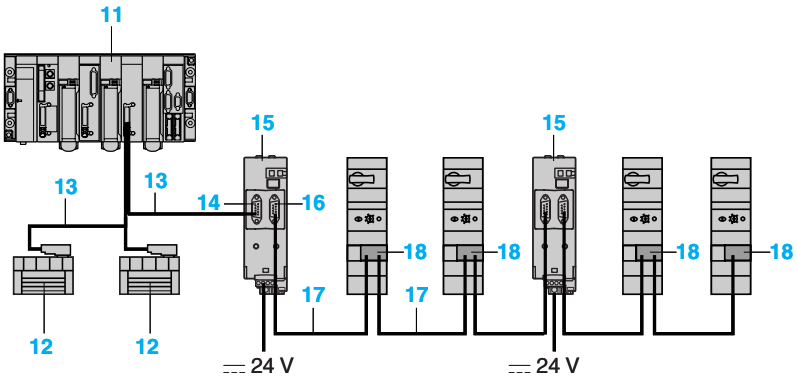

11 Programmable controller with Profibus DP master card
12 Other slave (not powered via the bus)
13 Profibus DP 2-wire cable (TSX PBSCA100 = 100 m, TSX PBSCA400 = 400 m)
14 Standard Profibus DP connector (490NAD91103 or 490NAD91104)
15 Profibus DP power supply module for ⎓ 24 V-Aux supply to LUL C07 modules (LU9 GC7)
16 Profibus DP connector, TeSys U dedicated (LU9 AD7)
17 Profibus DP 4-wire cable (LU9 RPB●●●)
18 Profibus DP communication module (LUL C07)

Profibus DP: general information

The TeSys U communication module supports 2 Profibus application profiles based on DP V0 and DP V1 services: motor starter (MS), motor management starter (MMS).

Cyclic / Acyclic services

In general, data is exchanged via cyclic services and via acyclic services.
The application profiles define, for the cyclic data:
■ manufacturer independent data,
■ manufacturer specific data.

DP V1 Read / Write services

DP V1 read and write services allow access to all data that cannot be accessed by cyclic data exchange.

PKW feature

In order to make data which is not cyclically exchanged accessible for DP V0 masters, a function called PKW (Periodically Kept in acyclic Words) is implemented. The cyclic data carries a dedicated zone of 4 input words and 4 output words, called PKW, which makes it possible to access all the registers 'en bloc'.

Electronic device description

The TeSys U system is described by a GS*- file *(1)*. This file will be used by any Profibus configuration tool to get information about the device.
The GS*- files and associated icon, dedicated to the TeSys U system, can be downloaded from the "www.schneider-electric.com" website (Library / Software Tools).

(1) Replace the asterisk with the letter corresponding to the required language.

TeSys motor starters - open version

TeSys U starter-controllers

Profibus DP communication module and pre-wired coil connection components

106949

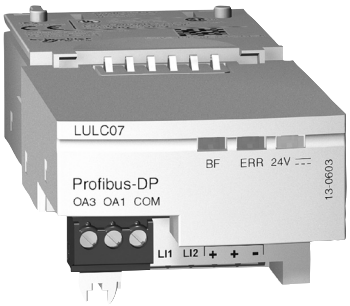

LUL C07

Information carried by the bus

Depends on the type of control unit used with module LUL C07.

Compatibility of Profibus DP communication module LUL C07 with ⎓ 24 V control units

Information accessible via Profibus DP	LUL C07 in conjunction with:		
	LUCA ●●BL	LUCB/C/D ●●BL	LUCM ●●BL
	Standard control unit	Advanced control unit	Multifunction control unit
Starter status (ready, running, fault)	■	■	■
Start and Stop commands	■	■	■
Thermal overload alarm		■	■
Remote reset via the bus		■	■
Indication of motor load		■	■
Fault signalling and differentiation		■	■
Remote programming and monitoring of all functions			■
"Log" function			■
"Monitoring" function			■
Alarms (overcurrent, ...)			■

■ Functions performed

References

Description	Item	Reference	Weight kg
Profibus DP communication module	18	**LUL C07**	0.108

Connection of communication module output terminals to the coil terminals

By pre-wired connector or wire link.

■ Pre-wired connector: pre-wired coil connection

The use of a power base without pre-wired control circuit connections is recommended.

Description	For use with power base	Item	Reference	Weight kg
Pre-wired coil connection	LUB ●●	4	**LU9B N11L**	0.050
	LU2B ●●	6	**LU9M RL**	0.450

■ **Wire link:**

Allows insertion, for example, of an emergency Stop control or a voltage interface.
This type of connection must be used for a reversing starter-controller assembled using an LU6M reverser block.
When this reverser block and the power base are mounted side-by-side, a pre-wired coil connection LU9M RL may be used.

510951

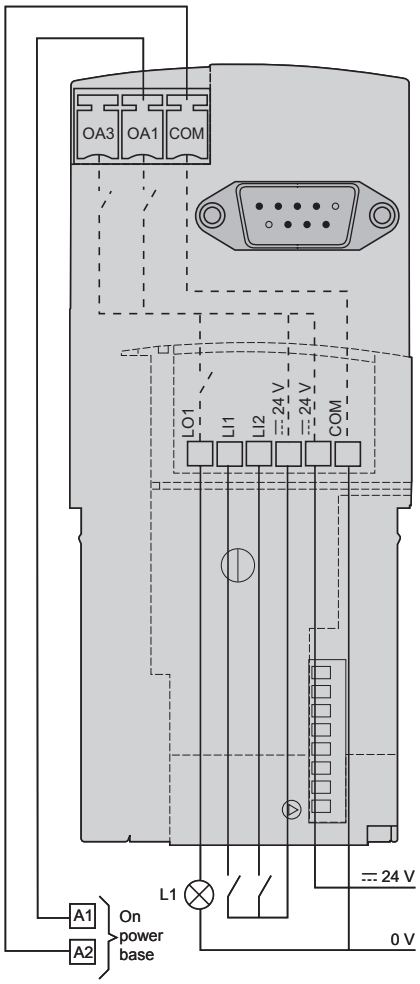

Connection of power supplies

Components for connection to the bus and to the installation

The ⎓ 24 V-Aux supply to Profibus DP modules LUL C07 must pass through power supply module LU9 GC7.
LUL C07 modules must be connected to the LU9 GC7 splitter box in order to be powered.
The number of TeSys U starter-controllers that can be powered by an LU9 GC7 module is limited by the maximum current (1.5 A) which it can deliver.
The ⎓ 24 V supply for the inputs/outputs must be provided separately.

Description	Length m	Item *(1)*	Reference	Weight kg
Profibus DP power supply module	–	15	**LU9 GC7**	–
Profibus DP connector	–	16	**LU9 AD7**	–
Profibus DP cables 2-wire	100	13	**TSX PBSCA100**	–
	400	13	**TSX PBSCA400**	–
Profibus DP cables 4-wire	10	17	**LU9 RPB010**	–
	100	17	**LU9 RPB100**	–
	400	17	**LU9 RPB400**	–

(1) See connection diagram on page 30.

TeSys motor starters - open version

TeSys U starter-controllers

Profibus DP communication module and pre-wired coil connection components

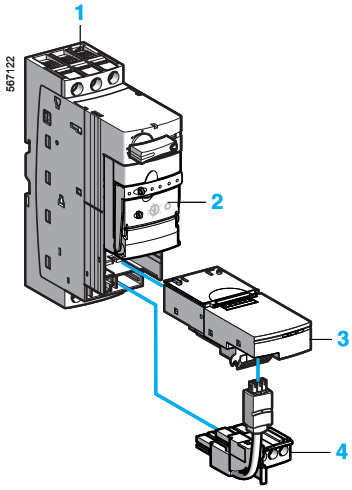

LUB + LUC ●●●BL
+ LUL C07 + LU9B N11L

Compatibility of Profibus DP communication module LUL C07 with starter-controller LUB 12 / LUB 32

Maximum power ratings 50/60 Hz 400/415 V	1	2	or		or	3	4
	Power base	Standard control unit	Advanced control unit		Multifunction control unit	Profibus DP module	Pre-wired coil connection, non-reversing
	Non-reversing	Class 10	Class 10	Class 20	Classes 5…30		
kW							
0.09	LUB 12 or LUB 32	LUC A6XBL	LUC B6XBL	LUC D6XBL	LUC M6XBL	LUL C07	LU9 BN11L
0.25	LUB 12 or LUB 32	LUC A1XBL	LUC B1XBL	LUC D1XBL	LUC M1XBL	LUL C07	LU9 BN11L
1.5	LUB 12 or LUB 32	LUC A05BL	LUC B05BL	LUC D05BL	LUC M05BL	LUL C07	LU9 BN11L
5.5	LUB 12 or LUB 32	LUC A12BL	LUC B12BL	LUC D12BL	LUC M12BL	LUL C07	LU9 BN11L
7.5	LUB 32	LUC A18BL	LUC B18BL	LUC D18BL	LUC M18BL	LUL C07	LU9 BN11L
15	LUB 32	LUC A32BL	LUC B32BL	LUC D32BL	LUC M32BL	LUL C07	LU9 BN11L

Note: *Profibus DP module LUL C07 is not compatible with LUT M controllers.*

TeSys motor starters - open version

TeSys U starter-controllers

Profibus DP communication module and pre-wired coil connection components

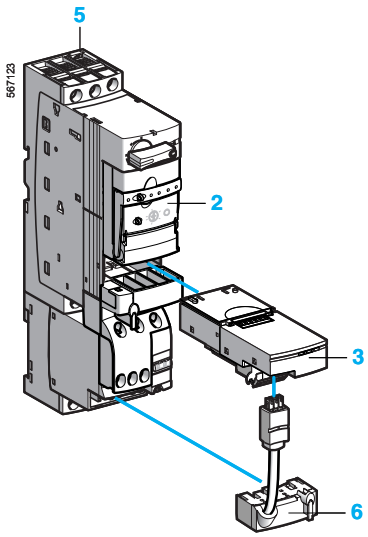

LU2B + LUC ●●●BL
+ LUL C07 + LU9M RL

Compatibility of Profibus DP communication module LUL C07 with starter-controller LU2B 12 / LU2B 32

Maximum power ratings 50/60 Hz 400/415 V		5 Power base	2 Standard control unit	or Advanced control unit		or Multifunction control unit	3 Profibus DP module	6 Pre-wired coil connection, reversing
		Reversing	Class 10	Class 10	Class 20	Classes 5…30		
kW								
0.09	or	LU2B 12BL LU2B 32BL	LUC A6XBL	LUC B6XBL	LUC D6XBL	LUC M6XBL	LUL C07	LU9 MRL
0.25	or	LU2B 12BL LU2B 32BL	LUC A1XBL	LUC B1XBL	LUC D1XBL	LUC M1XBL	LUL C07	LU9 MRL
1.5	or	LU2B 12BL LU2B 32BL	LUC A05BL	LUC B05BL	LUC D05BL	LUC M05BL	LUL C07	LU9 MRL
5.5	or	LU2B 12BL LU2B 32BL	LUC A12BL	LUC B12BL	LUC D12BL	LUC M12BL	LUL C07	LU9 MRL
7.5		LU2B 32BL	LUC A18BL	LUC B18BL	LUC D18BL	LUC M18BL	LUL C07	LU9 MRL
15		LU2B 32BL	LUC A32BL	LUC B32BL	LUC D32BL	LUC M32BL	LUL C07	LU9 MRL

Note: *Profibus DP module LUL C07 is not compatible with LUT M controllers.*

TeSys motor starters - open version

TeSys U starter-controllers

CANopen communication module and pre-wired coil connection components

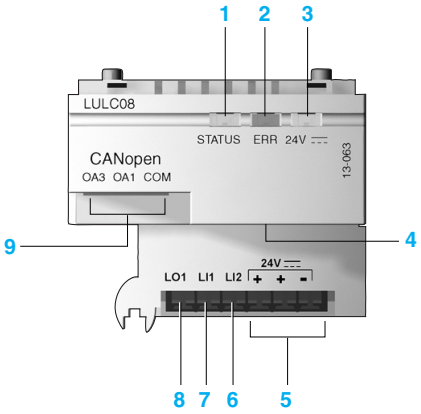

1 LED indicating module status
2 Fault signalling LED
3 LED indicating ⎓ 24 V supply ON for outputs OA1, OA3 and LO1
4 SUB-D connector for bus link
5 ⎓ 24 V supply connection
6 Discrete input
7 Discrete input
8 Discrete output
9 Outputs for starter commands

10 CANopen master module TSX CPP110 (PMCIA card with junction box).
11 Cable TSX CANC●● equipped with a TSX CANKCDF90T connector (to be assembled)
12 Terminal block TSX CANTDM4 with 4 SUB D type connectors for connection of slaves and screw terminal blocks (connection of bus and dedicated 24 V supply to modules LUL C08).
13 Connection between junction boxes TSX CANTDM4 by cable TSX CANCADD●● or cable TSX CANC●● fitted with TSX CANKCDF90T connectors.
14 The slaves are connected by means of cables TSX CANCADD●●
15 Connections are made by means of cables TSX CANC●● fitted with TSX CANKCDF180T connectors for the slaves and with TSX CANKCDF90T connectors for the junction boxes.
16 Starter-controller
17 CANopen communication module LUL C08
18 Advantys STB island (NIM: Network Interface Modules + I/O modules)
19 CANopen extension module STB XBE 2100K

Presentation

Communication module LUL C08 allows direct connection of TeSys U starter-controllers and controllers on a CANopen bus.
Module LUL C08 is of the slave type.

When used in conjunction with an LUC ●●●BL or LUC ●T1BL control unit, module LUL C08 provides control and command of the starter-controller and of the controller.

For local control requirements, the module is equipped with a configurable, ⎓ 24 V. 0.5 V discrete output and two configurable discrete inputs.

LUL C08 communication modules can be connected to Advantys STB module : XBE 2100K.

Connections

Star topology

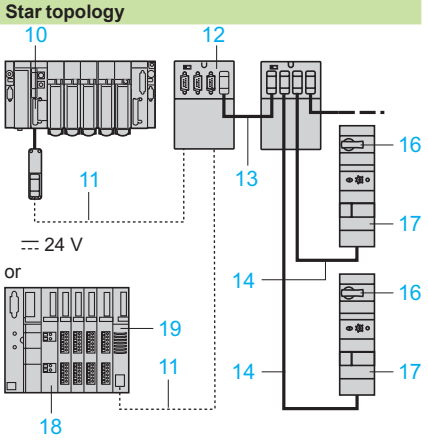

Bus topology

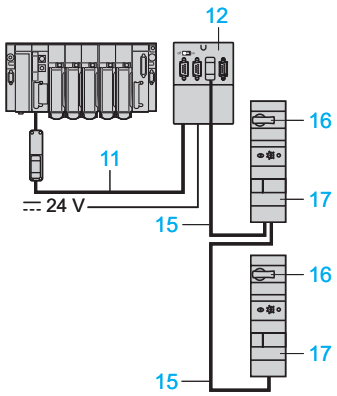

Connection of power supplies

The ⎓ 24 V power supply for modules LUL C08 is distributed via the bus and must be connected to the first TSX CANTDM4 junction box. The cable c.s.a. allows connection of up to 25 LUL C08 modules .
Above this number, another power supply must be connected to the next junction box.

A ⎓ 24 V supply must be connected to module LUL C08 for outputs OA1, OA3 and LO1.

Information carried by the bus

Depends on the type of control unit used.

Control unit	Standard	Advanced	Multifunction
Starter status (ready, running, fault)	■	■	■
Start and Stop commands	■	■	■
Thermal overload alarm		■	■
Remote reset via the bus		■	■
Indication of motor load		■	■
Fault signalling and differentiation		■	■
Remote programming and monitoring of all functions			■
"Log" function			■
"Monitoring" function			■
Alarms (overcurrent, ...)			■

■ Functions performed

For more detailed information, please refer to User's Manual LU9 CD1, see page opposite.

Compatibility of CANopen communication module with control units

LUCA ●●BL / B ●●BL / C ●●BL / D ●●BL	All versions marketed after **2T04081** *(1)*
LUCM ●●BL	All versions ≥ V3.2
LUCM T1BL	All versions ≥ V3.2

*(1) This "date code" is made up as follows: **2T** or **2C** factory code.*
***04**,**05**,**06** and so on: year of manufacture. **08**: week. **1**: 1st day of the week.*

TeSys motor starters - open version

TeSys U starter-controllers

CANopen communication module and pre-wired coil connection components

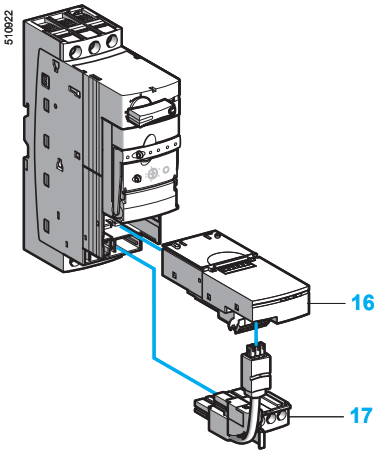

LUB + LUL C08 + LU9B N11L

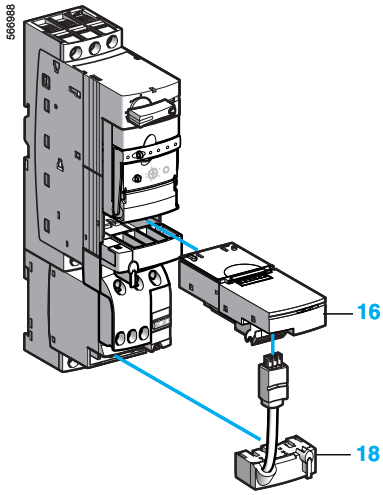

LU2B + LUL C08 + LU9M RL

Communication services

Communication module LUL C08 uses PDO, SDO and PKW type objects for data exchange (Process Data Objects, Service Data Objects, Periodically Kept in Acyclic Words).

Transmit and Receive PDO		
PDO 1	Real time command-control	Preconfigured and enabled
PDO 2, PDO 3	Unused	To be defined by configuration
PDO 4	Adjustment, diagnostics and acyclic exchanges	Preconfigured and enabled

References

Description	Item	Reference	Weight kg
CANopen communication module	16	**LUL C08**	0.108

Note: *The Electronic Data Sheets (EDS), and user's manuals are available on the website "www.schneider-electric.com".*

Pre-wired components simplify wiring and reduce wiring errors.

Connection of communication module output terminals to the coil terminals

By pre-wired connector or wire link.

■ Pre-wired connector: pre-wired coil connection

The use of a power base without pre-wired control circuit connections is recommended.

Description	For use with power base	Item	Reference	Weight kg
Pre-wired coil connection	LUB ●●	17	**LU9B N11L**	0.050
	LU2B ●●	18	**LU9M RL**	0.450

■ **Wire link:**

Allows insertion, for example, of an emergency stop control or a voltage interface. This type of connection must be used for a reversing starter-controller assembled using an LU6M reverser block for separate mounting. When reverser block LU6M and the power base are mounted side-by-side, a pre-wired coil connection LU9M RL may be used.

Cables for connection to the bus

Description	Length m	Item	Reference	Weight kg
Standard				
Cables equipped with SUB-D connectors	0.3	14	**TSX CANCADD03**	0.045
	1.0	14	**TSX CANCADD1**	0.065
	3	14	**TSX CANCADD3**	0.125
	5	14	**TSX CANCADD5**	1.500
Reel of cable	50	11	**TSX CANCA50**	–
	100	11	**TSX CANCA100**	–
UL approved				
Cables equipped with SUB-D connectors	0.3	14	**TSX CANCBDD03**	0.045
	1	14	**TSX CANCBDD1**	0.065
	3	14	**TSX CANCBDD3**	0.125
	5	14	**TSX CANCBDD5**	1.500
Reel of cable	50	11	**TSX CANCB50**	–
	100	11	**TSX CANCB100**	–

Separate components

Description	Reference	Weight kg
Elbowed connector	**TSX CANKCDF90T**	–
Straight connector	**TSX CANKCDF180T**	–
Junction box	**TSX CANTD M4**	–

TeSys motor starters - open version

TeSys U starter-controllers

DeviceNet communication module and pre-wired coil connection components

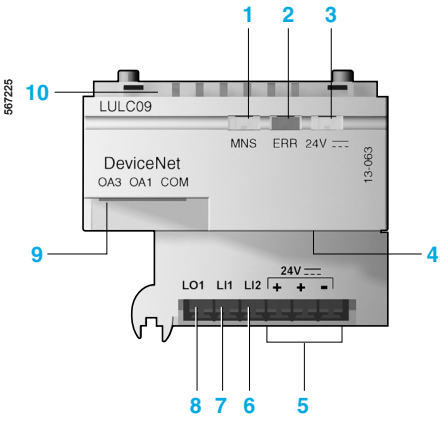

1 LED indicating module status
2 Fault signalling LED
3 LED indicating ⎓ 24 V supply ON for outputs OA1, OA3 and LO1 and 24 V bus
4 DeviceNet connector for bus link
5 ⎓ 24 V supply connection
6 Discrete input
7 Discrete input
8 Discrete output
9 Outputs for starter-controller commands (non-reversing and reversing)
10 Pin for connection to control unit (advanced or multifunction)

Presentation

When used in conjunction with the power base and control unit, communication module LUL C09 allows TeSys U starter-controllers and controllers to be controlled via DeviceNet.
Communication module LUL C09 is of the slave type and uses the TeSys U system's internal registers which can be accessed via DeviceNet.
Module LUL C09 has a configurable 24 V (0.5 A) discrete output and two configurable discrete inputs.

Connections

Serial bus topology

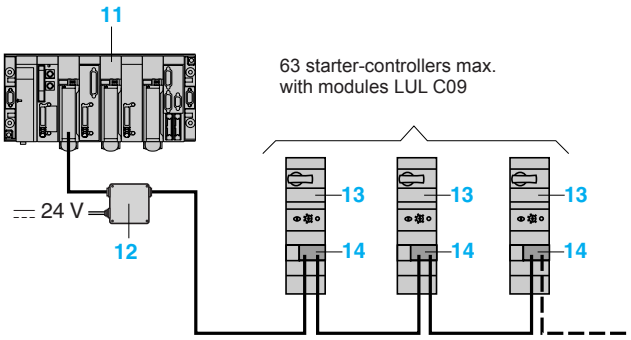

11 Industrial PLC: Industrial Programmable Controller equipped with a DeviceNet Master.
12 Connection and power distribution box for supply to DeviceNet communication modules.
13 Starter-controller.
14 DeviceNet communication module LUL C09.

TeSys motor starters - open version

TeSys U starter-controllers

DeviceNet communication module and pre-wired coil connection components

LUL C09

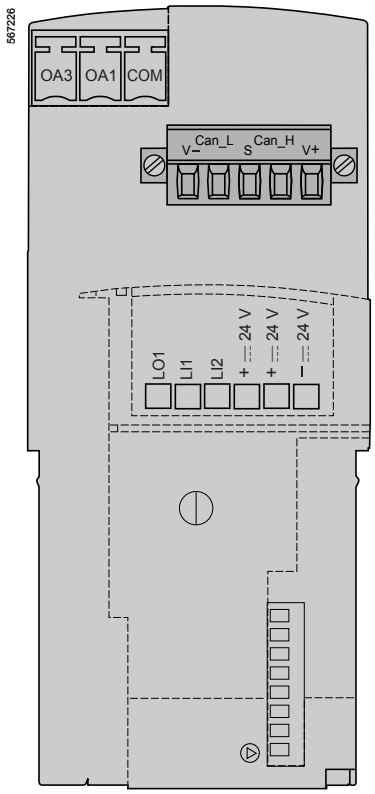

Connection of power supplies

Information carried by the bus

Depends on the type of control unit used with module LUL C09.

Compatibility of DeviceNet LUL C09 communication module with ⎓ 24 V control units

Information accessible via DeviceNet	LUL C09 in conjunction with: LUCA ●●BL Standard control unit	LUCB/C/D ●●BL Advanced control unit	LUCM ●●BL Multifunction control unit
Starter status (ready, running, fault)	■	■	■
Start and Stop commands	■	■	■
Thermal overload alarm		■	■
Remote reset via the bus		■	■
Indication of motor load		■	■
Fault signalling and differentiation		■	■
Remote programming and monitoring of all functions			■
"Log" function			■
"Monitoring" function			■
Alarms (overcurrent, ...)			■

■ Functions performed

References

Description	Item	Reference	Weight kg
DeviceNet communication module	14	**LUL C09**	0.108

Connection of communication module output terminals to the coil terminals

By pre-wired connector or wire link.

■ Pre-wired connector: pre-wired coil connection

The use of a power base without pre-wired control circuit connections is recommended.

Description	For use with power base	Reference	Weight kg
Pre-wired coil connection	LUB ●●	**LU9B N11L**	0.050
	LU2B ●●●●	**LU9M RL**	0.450

■ **Wire link:**

Allows insertion, for example, of an emergency Stop control or a voltage interface.
This type of connection must be used for a reversing starter-controller assembled using an LU6M reverser block.
When this reverser block and the power base are mounted side-by-side, a pre-wired coil connection LU9M RL may be used.

Supply

The 24 V supply to DeviceNet LUL C09 modules is provided via the (V+ , V-) terminals.
The 24 V supply for the inputs/outputs must be provided separately from the supply to the LUL C09 modules.
The 24 V Aux terminal is for supply to the LUCM control unit or the LUTM controller.

TeSys motor starters - open version

TeSys U starter-controllers

DeviceNet communication module and pre-wired coil connection components

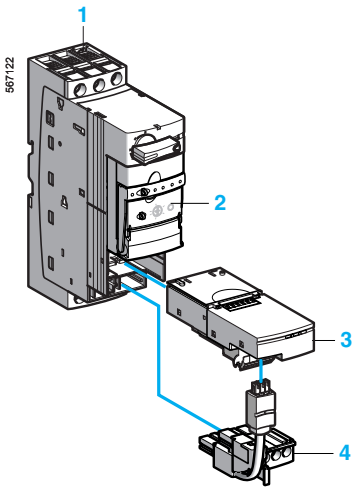

LUB + LUC ●●●BL
+ LUL C09 + LU9B N11L

Compatibility of DeviceNet communication module LUL C09 with starter-controller LUB 12 / LUB 32

Maximum power ratings 50/60 Hz 400/415 V	1	2	or		or	3	4
	Power base	Standard control unit	Advanced control unit		Multifunction control unit	DeviceNet module	Pre-wired coil connection, non-reversing
	Non-reversing	Class 10	Class 10	Class 20	Classes 5…30		
kW							
0.09	LUB 12 or LUB 32	LUC A6XBL	LUC B6XBL	LUC D6XBL	LUC M6XBL	LUL C09	LU9 BN11L
0.25	LUB 12 or LUB 32	LUC A1XBL	LUC B1XBL	LUC D1XBL	LUC M1XBL	LUL C09	LU9 BN11L
1.5	LUB 12 or LUB 32	LUC A05BL	LUC B05BL	LUC D05BL	LUC M05BL	LUL C09	LU9 BN11L
5.5	LUB 12 or LUB 32	LUC A12BL	LUC B12BL	LUC D12BL	LUC M12BL	LUL C09	LU9 BN11L
7.5	LUB 32	LUC A18BL	LUC B18BL	LUC D18BL	LUC M18BL	LUL C09	LU9 BN11L
15	LUB 32	LUC A32BL	LUC B32BL	LUC D32BL	LUC M32BL	LUL C09	LU9 BN11L

Note: *DeviceNet communication module LUL C09 is compatible with LUT M controllers.*

TeSys motor starters - open version

TeSys U starter-controllers

DeviceNet communication module and pre-wired coil connection components

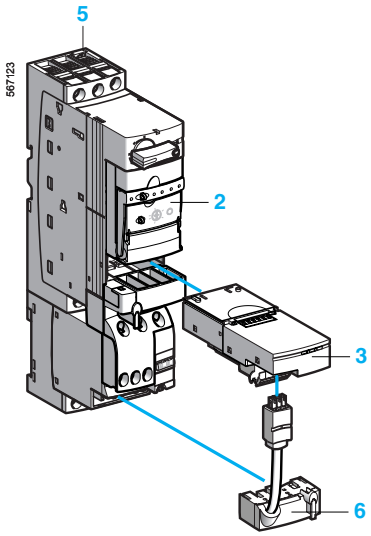

LU2B + LUC ●●●BL
+ LUL C09 + LU9M RL

Compatibility of DeviceNet communication module LUL C09 with starter-controller LU2B 12 / LU2B 32

Maximum power ratings 50/60 Hz 400/415 V		5 Power base	2 Standard control unit	or Advanced control unit		or Multifunction control unit	3 DeviceNet module	6 Pre-wired coil connection, reversing
		Reversing	Class 10	Class 10	Class 20	Classes 5…30		
kW								
0.09	or	LU2B 12BL LU2B 32BL	LUC A6XBL	LUC B6XBL	LUC D6XBL	LUC M6XBL	LUL C09	LU9 MRL
0.25	or	LU2B 12BL LU2B 32BL	LUC A1XBL	LUC B1XBL	LUC D1XBL	LUC M1XBL	LUL C09	LU9 MRL
1.5	or	LU2B 12BL LU2B 32BL	LUC A05BL	LUC B05BL	LUC D05BL	LUC M05BL	LUL C09	LU9 MRL
5.5	or	LU2B 12BL LU2B 32BL	LUC A12BL	LUC B12BL	LUC D12BL	LUC M12BL	LUL C09	LU9 MRL
7.5		LU2B 32BL	LUC A18BL	LUC B18BL	LUC D18BL	LUC M18BL	LUL C09	LU9 MRL
15		LU2B 32BL	LUC A32BL	LUC B32BL	LUC D32BL	LUC M32BL	LUL C09	LU9 MRL

Note: *DeviceNet communication module LUL C09 is compatible with LUT M controllers.*

TeSys motor starters - open version

TeSys U starter-controllers

Advantys STB communication module and pre-wired coil connection components

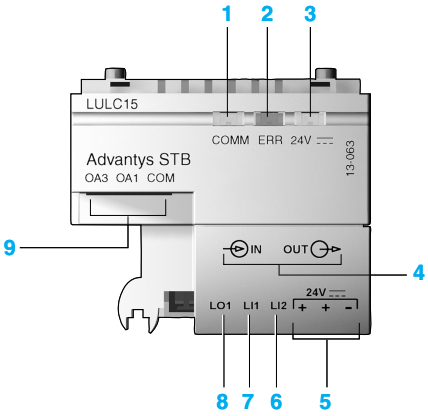

1 Two-colour LED indicating module status
2 Fault signalling LED
3 LED indicating that ⎓ 24 V supply is ON
4 Bus connectors
5 ⎓ 24 V supply connection
6 Discrete input
7 Discrete input
8 Discrete output
9 Outputs for starter commands

Presentation

Communication module LUL C15 allows direct connection of TeSys U starter-controllers and controllers on an Advantys STB island, between two segments or at the end of a segment. In the latter case, the segment must be equipped with an EOS (End of segment) extension module STB XBE1100.
The starter-controller will then be able to make use of the services provided by Advantys STB: self-addressing, autobaud, fallback positions.
When used in conjunction with an LUC ●●●BL or LUC ●T1BL control unit, module LUL C15 provides control and command of the starter-controller and of the controller.
For local control requirements, the module is equipped with a configurable, ⎓ 24 V, 0.5 A discrete output and two configurable discrete inputs.

Connections

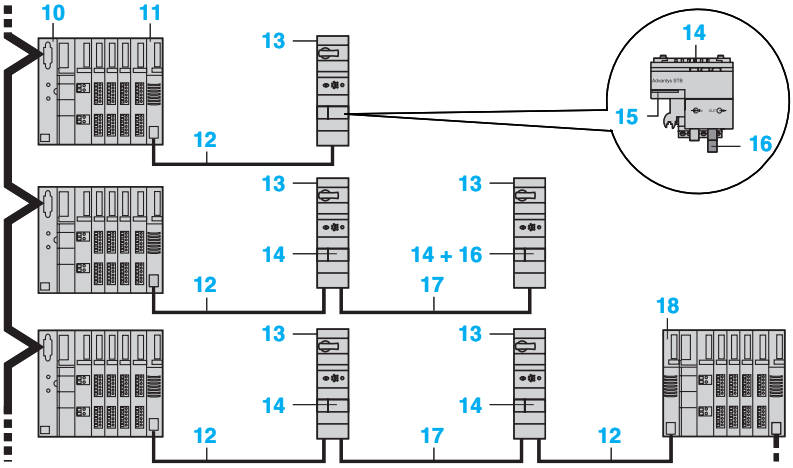

10 Advantys STB island (NIM: Network Interface Module + I/O modules).
11 Extension module (EOS/End of segment) STB XBE1100.
12 Bus connecting cable LU9 RCD●●, elbowed/straight, for connection of the first TeSys U communication module.
13 Starter-controller.
14 Communication module LUL C15.
15 Connector for connection of product either by wire link or using coil connection modules LU9 BN11L or LU9 MRL.
16 Line end adapter LU9 RFL15.
17 Bus connection cable LU9 RDD●●, straight/straight, for connections between LUL C15 modules.
18 Beginning of segment (BOS).

Connection of power supply for the outputs

A ⎓ 24 V supply must be connected to module LUL C15 for outputs OA1, OA3 and LO1.

Information carried by the bus

Depends on the type of control unit used.

Control unit	Standard	Advanced	Multifunction
Starter status (ready, running, fault)	■	■	■
Start and Stop commands	■	■	■
Thermal overload alarm		■	■
Remote reset via the bus		■	■
Indication of motor load		■	■
Fault signalling and differentiation		■	■
Remote programming and monitoring of all functions			■
"Log" function			■
"Monitoring" function			■
Alarms (overcurrent, ...)			■

■ Functions performed

For more detailed information, please refer to User's Manual LU9 CD1, see page opposite.

Compatibility of Advantys STB communication module with control units

LUCA ●●BL / B ●●BL / C ●●BL / D ●●BL	All versions marketed after **2T04081** *(1)*
LUCM ●●BL	All versions ≥ V3.2
LUCM T1BL	All versions ≥ V3.2

*(1) This "date code" is made up as follows: **2T** or **2C**: factory code. **04**,**05**,**06** and so on: year of manufacture. **08**: week. **1**: 1st day of the week.*

TeSys motor starters - open version

TeSys U starter-controllers

Advantys STB communication module and pre-wired coil connection components

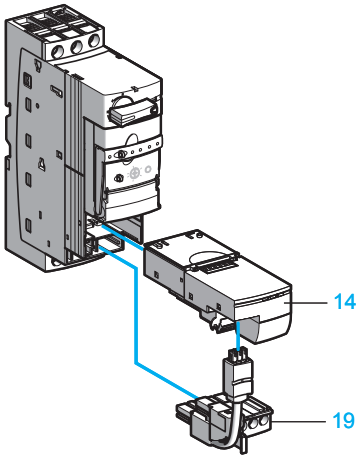

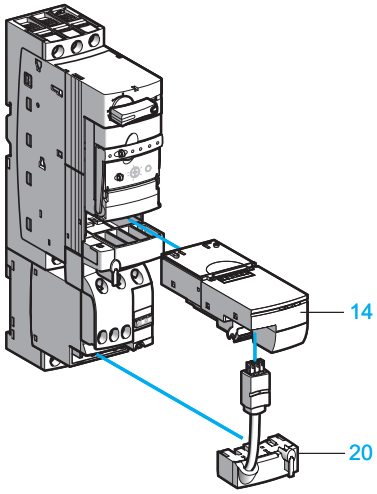

Possible architectures

The maximum number of starter-controllers and controllers that can be connected to an Advantys STB island depends on the Network Interface Module (NIM) used and the associated control units.

NIM *(Network Interface Module)*		Number of starter-controllers			Number of controllers
		LUCA ●●BL	LUCB ●●BL LUCC ●●BL LUCD ●●BL	LUCM ●●BL	LUCB ●● LUCD ●● LUCM ●●
CANopen	Standard	17	17	15	15
	Basic	12	12	12	12
DeviceNet	Standard	18	18	16	16
	Basic	12	12	12	12
Profibus DP	Standard	9	8	8	8
	Basic	9	8	8	8
Interbus	Standard	2	2	1	1
	Basic	2	2	1	1
Fipio	Standard	4	4	4	4
Modbus plus	Standard	17	17	15	15
Ethernet	Standard	32	32	32	32

References

Description	Item	Reference	Weight kg
Advantys STB communication module	14	**LUL C15**	0.108
Line end adapter	16	**LU9 RFL15**	0.012
End of segment (EOS)	11	**STB XBE1100**	–
Beginning of segment (BOS)	18	**STB XBE1300**	–

Pre-wired components simplify wiring and reduce wiring errors.

Connection of communication module output terminals to the coil terminals

By pre-wired connector or wire link.

■ Pre-wired connector: pre-wired coil connection.

The use of a power base without pre-wired control circuit connections is recommended.

Description	For use with power base	Item	Reference	Weight kg
Pre-wired coil connection	LUB ●●	19	**LU9B N11L**	0.050
	LU2B ●●	20	**LU9M RL**	0.450

■ **Wire link:**

Allows insertion, for example, of an emergency Stop control or a voltage interface. This type of connection must be used for a reversing starter-controller assembled using an LU6M reverser block for separate mounting. When reverser block LU6M and the power base are mounted side-by-side, a pre-wired coil connection LU9M RL may be used.

Cables

Description	Length m	Item	Reference	Weight kg
Cables fitted with connectors, one straight and one elbowed	0.3	12	**LU9 RCD03**	0.045
	1	12	**LU9 RCD10**	0.065
	3	12	**LU9 RCD30**	0.125
	5	12	**LU9 RCD50**	1.500
Cables fitted with two straight connectors	0.3	17	**LU9 RDD03**	0.045
	1	17	**LU9 RDD10**	0.065
	3		**LU9 RDD30**	0.125

Note: *User manuals are available on the website "www.schneider-electric.com".*

TeSys motor starters - open version

TeSys U starter-controllers

Modbus communication modules and pre-wired coil connection components

LUL C031 **LUL C033**

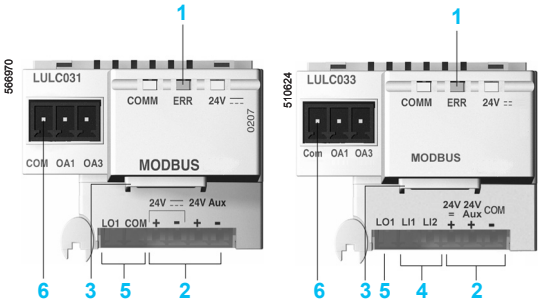

1 Module status signalling LED
2 24 V supply connection
3 RJ45 connector for RS485 Modbus link
4 2 discrete inputs
5 1 discrete output
6 Outputs for starter commands

Presentation

Communication modules LUL C031 and LUL C033 enable the TeSys U starter-controller to be connected to the Modbus network.
They must have a ⎓ 24 V supply and must be used in conjunction with a ⎓ 24 V control unit, LUC● ●●BL.
They incorporate a 0.5 A, ⎓ 24 V discrete output for local command requirements.
The module LUL C033 also has two configurable discrete inputs.

Series type connection

Architecture

Star topology **Bus topology**

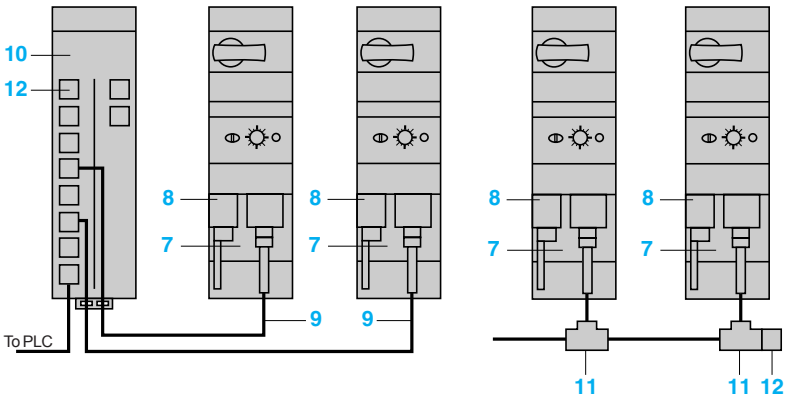

7 Communication module LUL C031 or LUL C033
8 Pre-wired coil connection LU9B N11C
9 Connection cable VW3 A8 306 R●● with one RJ45 connector at each end
10 Modbus hub LU9 GC3 with channel connections to PLC and to starter-controller with RJ45 connectors
11 T-junction VW3 A8 306 TF●●
12 Line terminator VW3 A8 306 R

Information carried by the bus

Depends on the type of control unit used.

Control unit	Standard	Advanced	Multifunction
Starter status (ready, running, fault)	■	■	■
Start and Stop commands	■	■	■
Thermal overload alarm		■	■
Remote reset via the bus		■	■
Indication of motor load		■	■
Fault signalling and differentiation		■	■
Remote programming and monitoring of all functions			■
“Log” function			■
“Monitoring” function			■
Alarms (overcurrent, ...)			■

■ Functions performed

For more detailed information, please refer to User’s Manual LU9 CD1, see page opposite.

Compatibility of Modbus communication modules

With starter-controllers and controllers

Starter-controllers and controllers	LUL C031	LUL C033
LUB ●● / LU2B●2	■	■
LUT M ●●BL		■

■ Possible combinations.

TeSys motor starters - open version

TeSys U starter-controllers

Modbus communication modules and pre-wired coil connection components

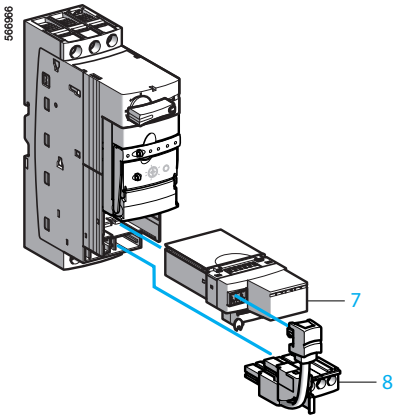

LUB + LUL C03● + LU9B

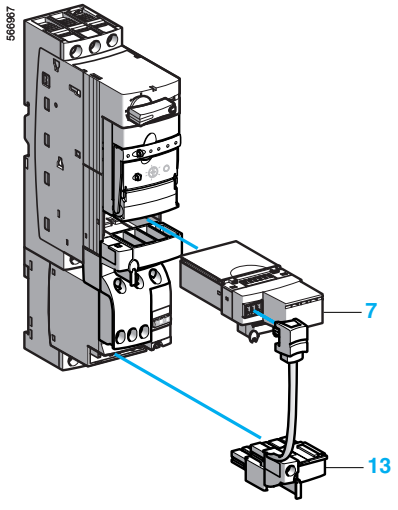

LU2B + LUL C03● + LU9M

Compatibility of Modbus communication modules (continued)

With power bases

Control unit software versions		LUL C031 V2.3 *(1)*	LUL C033 V2.2 *(1)*
LUCA ●●BL	–	Yes	Yes
LUCB ●●BL, LUCC ●●BL and LUCD ●●BL	–	Yes	Yes
LUCM ●●BL	V1.04	Yes	No
	V1.05	Yes	Yes
	V1.06	Yes	No
	V1.10 *(1)*	Yes	Yes

With base controllers, version 1.200 *(1)*

Control unit software versions		LUL C031 V2.3 *(1)*	LUL C033 V2.1 *(1)*
LUCB T●●BL and LUCD T●●BL	–	No	Yes
LUCM T●●BL	V2.11 *(1)*	No	Yes

(1) And higher versions

Combinations not permitted.

References

Description	Item	Reference	Weight kg
Modbus communication modules	7	**LUL C031**	0.080
	7	**LUL C033**	0.080

Pre-wired components simplify wiring and reduce wiring errors.

Connection of communication module output terminals to the coil terminals

By pre-wired connector or wire link.

■ **Pre-wired connector: pre-wired coil connection**

The use of a power base without pre-wired control circuit connections is recommended.

Description	For use with power base	Item	Reference	Weight kg
Pre-wired coil connection	LUB ●●	8	**LU9B N11C**	0.045
	LU2B ●●	13	**LU9M RC**	0.030

■ **Wire link:**

Allows insertion, for example, of an emergency Stop control or a voltage interface. This type of connection must be used for a reversing starter-controller assembled using an LU6M reverser block for separate mounting. When reverser block LU6M and the power base are mounted side-by-side, a pre-wired coil connection LU9M RC may be used.

Connection of communication modules on the serial bus

Achieved either by means of a Modbus hub or using T-junctions.

Description	Length m	Item	Reference	Weight kg
Modbus hub 8 slaves	–	10	**LU9 GC3**	0.260
Cables fitted with 2 x RJ45 connectors	0.3	9	**VW3 A8 306 R03**	0.045
	1	9	**VW3 A8 306 R10**	0.065
	3	9	**VW3 A8 306 R30**	0.125
T-junctions *(1)*	0.3	11	**VW3 A8 306 TF03**	0.032
	1	11	**VW3 A8 306 TF10**	0.032
RS 485 line terminator	–	12	**VW3 A8 306 R**	0.012

TeSys U user's manual *(2)*

Application	Language	Reference	Weight kg
On CD-Rom	Multi-language *(3)*	**LU9 CD1**	0.022

(1) Fitted with 2 x RJ45 female connectors (bus side) and a 0.3 m or 1 m length cable supplied with an RJ45 male connector (station side).

(2) The CD-Rom contains user's manuals for the AS-Interface and Modbus communication modules, multifunction control units and gateway modules, as well as the gateway programming software.

(3) English, French, German, Italian, Spanish

TeSys motor starters - open version
Communication gateways LUF P

Presentation

Communication gateways LUF P allow connection between the Modbus serial link and Fipio, Profibus DP or DeviceNet field buses.

After configuration, these gateways manage information which can be accessed by the Modbus serial link and make this information available for read/write functions (command, monitoring, configuration and adjustment) on the field buses.

An LUF P communication gateway consists of a box which can be clipped onto a 35 mm omega rail, allowing connection of up to 8 Slaves connected on the Modbus serial link.

Example of architecture

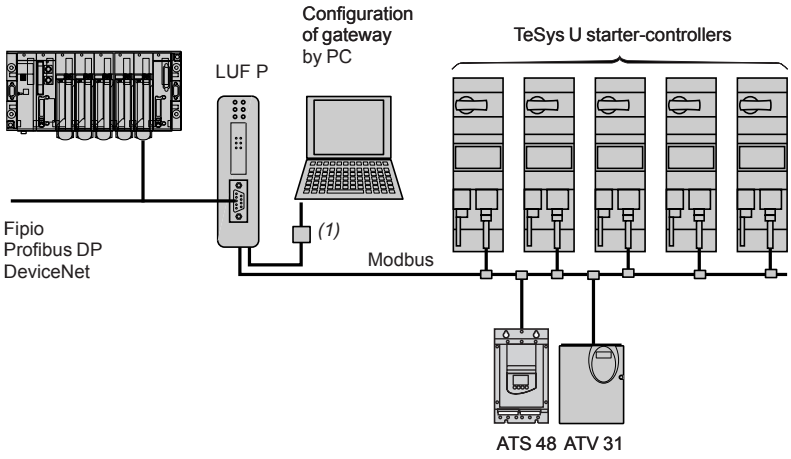

Description

Front panel of the product

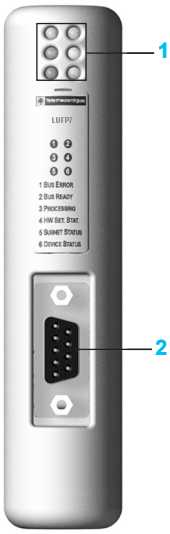

1 LED indicating :
- communication status of the Modbus serial links,
- gateway status,
- communication status of the Fipio, Profibus DP or DeviceNet bus.

2 Connectors for connection to Fipio, Profibus DP or DeviceNet buses.

Underside of product

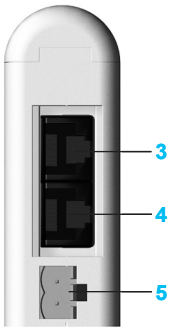

3 RJ45 connector for connection of the Modbus serial link
4 RJ45 connector for link to a PC
5 ⎓ 24 V power supply

Software set-up

For the Fipio bus, software set-up of the gateway is performed using either PL7 Micro/Junior/Pro software or ABC Configurator software.
For the Profibus DP and DeviceNet buses, software set-up is performed using ABC Configurator.
This software is included in the TeSys U user's manual.

(1) Connection kit for PowerSuite software workshop (see page 24).

Characteristics, references: page 45
Dimensions: page 45
Schemes: page 68

TeSys motor starters - open version
Communication gateways LUF P

Characteristics

Bus type			Fipio	Profibus DP	DeviceNet
Environment	Conforming to IEC 60664		Degree of pollution: 2		
Ambient air temperature	Around the device	**°C**	+ 5…+ 50		
Degree of protection			IP 20		
Electromagnetic compatibility	Emission		Conforming to IEC 50081-2: 1993		
	Immunity		Conforming to IEC 61000-6-2: 1999		
Number of Modbus slaves which can be connected			⩽ 8		
Connection	Modbus		By RJ45 connector conforming to Schneider Electric RS485 standard		
	To a PC		By RJ45 connector, with PowerSuite connection kit		
	Field bus		By SUB D9 female connector	By SUB D9 female connector	By 5-way removable screw connector
Supply		**V**	External supply, ⎓ 24 ± 10 %		
Consumption	Max.	**mA**	280		
	Typical	**mA**	100		
Indication/diagnostics			By LED on front panel		
Services	Profile		FED C32 or FED C32P	–	–
	Command		26 configurable words *(1)*	122 configurable words	256 configurable words
	Monitoring		26 configurable words *(1)*	122 configurable words	256 configurable words
	Configuration and adjustment		By gateway mini messaging facility (PKW)		

References

Description	For use with	With bus/ serial link	Reference	Weight kg
Communication gateways	TeSys U starter-controllers, Altistart 48, Altivar 31	Fipio/Modbus	**LUF P1**	0.245
		Profibus DP/Modbus	**LUF P7**	0.245
		DeviceNet/Modbus	**LUF P9**	0.245

Connection accessories

TSX FP ACC 12

490 NAD 911 03

Description	For use with	Length m	Connectors	Reference	Weight kg
Connection cables	Modbus	3	1 RJ45 type connector and one end with stripped wires	**VW3 A8 306 D30**	0.150
		0.3	2 RJ45 type connectors	**VW3 A8 306 R03**	0.050
		1	2 RJ45 type connectors	**VW3 A8 306 R10**	0.050
		3	2 RJ45 type connectors	**VW3 A8 306 R30**	0.150
Connectors	Fipio	–	1 SUB-D 9 male connector	**TSX FP ACC12**	0.040
	Profibus mid line	–	1 SUB-D 9 male connector	**490 NAD 911 04**	–
	Profibus line end	–	1 SUB-D 9 male connector	**490 NAD 911 03**	–

Documentation

Description	Medium	Language	Reference	Weight kg
User's manual for TeSys U range *(2)*	CD-Rom	Multilingual: English, French, German, Italian, Spanish	**LU9 CD1**	0.022

Dimensions

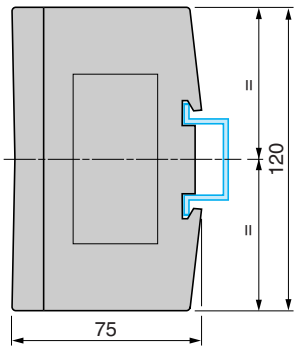

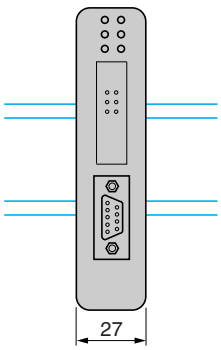

(1) If the gateway is configured using PL7 and not ABC Configurator, the I/O capacity is limited to a total of 26 words.
(2) This CD-Rom contains user's manuals for AS-Interface and Modbus communication modules, multifunction control units and gateways, as well as for the gateway programming software, ABC Configurator.

Presentation, description: page 44
Setting-up: page 44
Schemes: page 68

Environment

Product certifications			UL, CSA, CCC, GOST, ASEFA.
			ABS, BV, DNV, GL, LROS. ATEX.
Conforming to standards			IEC/EN 60947-6-2, CSA C22-2 N°14, Type E UL 508 type E: with phase barrier LU9 SP0
Rated insulation voltage (Ui)	Conforming to IEC/EN 60947-1, overvoltage category III, degree of pollution: 3	**V**	690
	Conforming to UL508, CSA C22-2 n°14	**V**	600
Rated impulse withstand voltage (Uimp)	Conforming to IEC/EN 60947-6-2	**kV**	6
Safety separation of circuits SELV	Conforming to IEC/EN 60947-1 appendix N	**V**	Between the control or auxiliary circuit and the main circuit: 400
			Between the control and auxiliary circuits: 400
Degree of protection Conforming to IEC/EN 60947-1 (protection against direct finger contact)	Front panel outside connection zone		IP 40
	Front panel and wired terminals		IP 20
	Other faces		IP 20
Protective treatment	Conforming to IEC/EN 60068		"TH"
	Conforming to IEC/EN 60068-2-30	**Cycles**	12
	Conforming to IEC/EN 60068-2-11	**h**	48
Ambient air temperature around the device	Storage	**°C**	- 40…+ 85
	Operation	**°C**	Power bases and standard and advanced control units: - 25… + 70. (At temperatures above 60°C and up to 70°C, for starter-controller LUB32, leave a minimum gap of 9 mm between products).
			Power bases and multifunction control units: - 25…+ 60. (At temperatures above 45 °C, leave a minimum gap of 9 mm between products. At temperatures above 55 °C and up to 60 °C, leave a gap of 20 mm between products.)
Maximum operating altitude		**m**	2000
Operating positions	In relation to normal vertical mounting plane		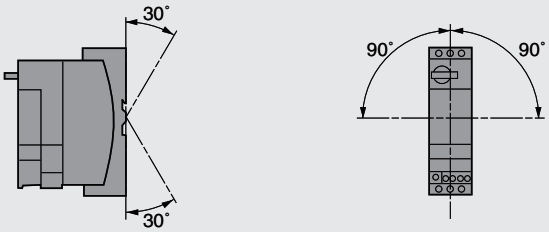
Flame resistance	Conforming to UL 94		V2
	Conforming to IEC/EN 60695-2-12	**°C**	960 (parts supporting live components)
		°C	650
Environmental restrictions			Cadmium and silicone-free, recyclable
Shock resistance 1/2 sine wave = 11 ms	Conforming to IEC/EN60068-2-27 *(1)*		Power poles open: 10 gn
			Power poles closed: 15 gn
Vibration resistance 5…300 Hz	Conforming to IEC/EN 60068-2-6 *(1)*		Power poles open: 2 gn
			Power poles closed: 4 gn *(2)*
Resistance to electrostatic discharge	Conforming to IEC/EN 61000-4-2	**kV**	In open air: 8 - Level 3
		kV	On contact: 8 - Level 4
Immunity to radiated high-frequency disturbance	Conforming to IEC/EN 61000-4-3	**V/m**	10 - Level 3
Immunity to fast transient currents	Conforming to IEC/EN 61000-4-4	**kV**	All circuits except for serial link: 4 - Level 4
		kV	Serial link: 2 - Level 3
Immunity to dissipated shock waves	Conforming to IEC/EN 60947-6-2		**Common mode** / **Serial mode**
	Uc ∿ 24…240 V, Uc ⎓ 48…220 V	**kV**	2 / 1
	Uc = 24 V ⎓		Not applicable
Immunity to conducted high-frequency disturbance	Conforming to IEC/EN 61000-4-6	**V**	10
Radiated emission and conducted	Conforming to CISPR 11 and EN 55011		Class A

(1) Without modifying the contact states, in the most unfavourable direction.
(2) 2 gn with Advantys STB or CANopen communication modules.

References : pages 12 to 26
Dimensions : pages 60 and 61
Schemes : pages 62 to 69

TeSys motor starters - open version

TeSys U starter-controllers

Power bases and control units

Power base, control unit or reverser block type			LUB 12 + LUCA or LUCB or LUCC or LUCD	LUB 32 + LUCA or LUCB or LUCC or LUCD	LUB 12 + LUCM	LUB 32 + LUCM	LU2M LU6M
Power circuit connection characteristics							
Connection to Ø 4 mm screw clamp terminals							
Flexible cable without cable end	1 conductor	mm²	2.5…10	2.5…10	2.5…10	2.5…10	2.5…10
	2 conductors	mm²	1.5…6	1.5…6	1.5…6	1.5…6	1.5…6
Flexible cable with cable end	1 conductor	mm²	1…6	1…6	1…6	1…6	1…6
	2 conductors	mm²	1…6	1…6	1…6	1…6	1…6
Solid cable without cable end	1 conductor	mm²	1…10	1…10	1…10	1…10	1…10
	2 conductors	mm²	1…6	1…6	1…6	1…6	1…6
Screwdriver			Philips n° 2 or flat screwdriver: Ø 6 mm				
Tightening torque		N.m	1.9…2.5	1.9…2.5	1.9…2.5	1.9…2.5	1.9…2.5
Control circuit connection characteristics							
Connection to Ø 3 mm screw clamp terminals							
Flexible cable without cable end	1 conductor	mm²	0.75…1.5	0.75…1.5	0.75…1.5	0.75…1.5	0.75…1.5
	2 conductors	mm²	0.75…1.5	0.75…1.5	0.75…1.5	0.75…1.5	0.75…1.5
Flexible cable with cable end	1 conductor	mm²	0.34…1.5	0.34…1.5	0.34…1.5	0.34…1.5	0.34…1.5
	2 conductors	mm²	0.34…1.5	0.34…1.5	0.34…1.5	0.34…1.5	0.34…1.5
Solid cable without cable end	1 conductor	mm²	0.75…1.5	0.75…1.5	0.75…1.5	0.75…1.5	0.75…1.5
	2 conductors	mm²	0.75…1.5	0.75…1.5	0.75…1.5	0.75…1.5	0.75…1.5
Screwdriver			Philips n° 1 or flat screwdriver: Ø 5 mm				
Tightening torque		N.m	0.8…1.2	0.8…1.2	0.8…1.2	0.8…1.2	0.8…1.2
Control circuit characteristics							
Rated voltage of control circuit	∼ 50/60 Hz	V	24…240	24…240	–	–	–
	⎓	V	24…220	24…220	24	24	–
Voltage limits	⎓ 24 V *(1)*	V	20…27	20…27	20…28	20…28	–
Operation	∼ 24 V	V	20…26.5	20…26.5	–	–	–
	∼ or ⎓ 48…72 V	V	∼ 38.5…72. ⎓ 38.5…93		–	–	–
	∼ 110…240 V	V	∼ 88…264	∼ 88…264	–	–	–
	⎓ 110…220 V	V	⎓ 88…242	⎓ 88…242	–	–	–
Drop-out	⎓ 24 V	V	14.5	14.5	14.5	14.5	–
	∼ 24 V	V	14.5	14.5	–	–	–
	∼ or ⎓ 48…72 V	V	29	29	–	–	–
	∼ 110…240 V, ⎓ 110…220 V	V	55	55	–	–	–
Typical consumption	⎓ 24 V	mA	130	220	150	200	120
I max while closing	∼ 24 V	mA	140	220	–	–	2360
	∼ or ⎓ 48…72 V	mA	280	280	–	–	2300
	∼ 110…240 V, ⎓ 110…220 V	mA	280	280	–	–	1000
I rms sealed	⎓ 24 V	mA	60	80	70	75	120
	∼ 24 V	mA	70	90	–	–	*(2)*
	∼ or ⎓ 48…72 V	mA	35	45	–	–	*(2)*
	∼ 110…240 V, ⎓ 110…220 V	mA	35	25	–	–	*(2)*
Heat dissipation		W	2	3	1.7	1.8	–
Operating time	Closing	ms	24 V: 70; 48 V: 60; ≥ 72 V: 50		75	65	–
	Opening	ms	35	35	35	35	–
Resistance to micro-breaks		ms	3	3	3	3	–
Resistance to voltage dips	IEC/EN 61000-4-11		At least 70 % of Uc for 500 ms				–
Mechanical durability	In millions of operating cycles		15	15	15	15	–
Maximum operating rate	In operating cycles per hour		3600	3600	3600	3600	–
Main pole characteristics							
Number of poles			3	3	3	3	–
Isolation conforming to IEC/EN 60947-1	Possible		Yes	Yes	Yes	Yes	–
	Padlocking		1 padlock with Ø 6.9 mm shank				–
Rated thermal current		A	12	32	12	32	–
Rated operational current (Ue ≤ 440V)	To IEC/ EN 60947-6-2 Category AC-41		θ ≤ 70°C: 12A	θ ≤ 70°C: 32A	θ ≤ 55°C: 12A	θ ≤ 55°C: 32A	–
	Category AC-43		θ ≤ 70°C: 12A	θ ≤ 70°C: 32A	θ ≤ 55°C: 12A	θ ≤ 55°C: 32A	–
Rated operational voltage		V	690 *(3)*	690 *(3)*	690 *(3)*	690 *(3)*	–
Frequency limits	Of the operating current	Hz	40…60	40…60	40…60	40…60	–
Power dissipated in the power circuits	Operational current	A	3 6 9 12	18 25 32			–
	Power dissipated in all three poles	W	0.1 0.3 0.6 1.1	2.4 4.6 7.5			–
Rated breaking capacity on short-circuit		V	230 440	500 690			–
		kA	50 50	10 4			–
Total breaking time		ms	2 2	2			–
Thermal limit	With Isc max on 440 V	kA²s	90	120	90	120	–

(1) Voltage with maximum ripple of ± 10 %.
(2) No consumption sealed. (3) For 690 V, use phase barrier LU9 SP0.

TeSys motor starters - open version

TeSys U starter-controllers

Reversing power bases and auxiliary contacts

Specific characteristics of power bases LU2B and reverser blocks LU2M or LU6M				
Duration of inrush phase		∼ 50/60 Hz	**ms**	25
		⎓	**ms**	15
Maximum operating time	Without change of direction		**ms**	75
	With change of direction		**ms**	150
General characteristics of auxiliary contacts				
Conventional thermal current (Ith)	For ambient temperature θ < 70 °C		**A**	5
Frequency of the operational current			**Hz**	Up to 400
Minimum switching capacity λ = 10^{-8}		U min	**V**	17
		I min	**mA**	5
Short-circuit protection	Conforming to IEC/EN 60947-5-1		**A**	gG fuse: 4
Short-time rating	Permissible for	1 s	**A**	30
		500 ms	**A**	40
		100 ms	**A**	50
Insulation resistance			**mΩ**	10
Non-overlap time	Guaranteed between N/C and N/O contacts		**ms**	2 (on energisation and on de-energisation)
Specific characteristics of auxiliary contacts built-into the power base				
Linked contacts	Conforming to IEC/EN 60947-4-1			Each power base has 1 N/O contact and 1 N/C contact which are mechanically linked
Mirror contact	Conforming to IEC/EN 60947-1			The N/C contact fitted in each power base reliably represents the state of the power contacts (safety scheme)
Rated operational voltage (Ue)			**V**	Up to ∼ 690; ⎓ 250
Rated insulation voltage (Ui)	Conforming to IEC/EN 60947-5-1		**V**	690
	Conforming to UL, CSA		**V**	600
Specific characteristics of auxiliary contacts in modules LUF N, of auxiliary contacts LUA1 and of reverser blocks LU2M and LU6M				
Rated operational voltage (Ue)			**V**	Up to ∼ 250; ⎓ 250
Rated insulation voltage (Ui)	Conforming to IEC/EN60947-5-1		**V**	250
	Conforming to UL, CSA		**V**	250

Rated operational power of contacts
Conforming to IEC/EN 60947-5-1

a.c. supply, categories AC-14 and AC-15
Electrical durability (valid for up to 3600 operating cycles/hour) on an inductive load such as the coil of an electromagnet: making current (cos φ 0.7) = 10 times the power broken (cos φ = 0.4)

	V	24	48	115	230	400	440	600
1 million operating cycles	**VA**	60	120	280	560	960	1050	1440
3 million operating cycles	**VA**	16	32	80	160	280	300	420
10 million operating cycles	**VA**	4	8	20	40	70	80	100

d.c. supply, category DC-13
Electrical durability (valid for up to 1200 operating cycles/hour) on an inductive load such as the coil of an electromagnet, without economy resistor, the time constant increasing with the load.

V	24	48	125	250
W	120	90	75	68
W	70	50	38	33
W	25	18	14	12

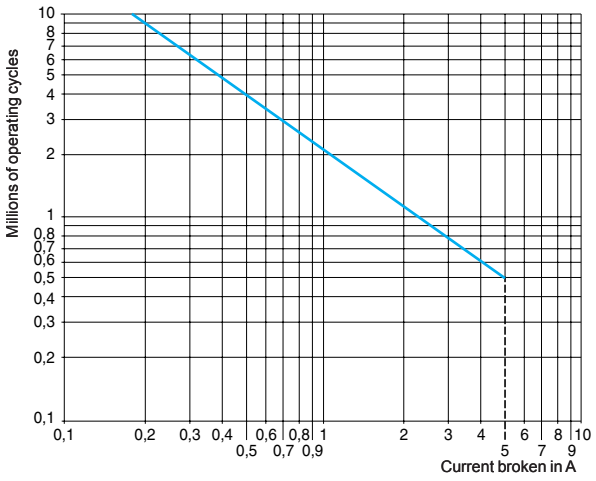

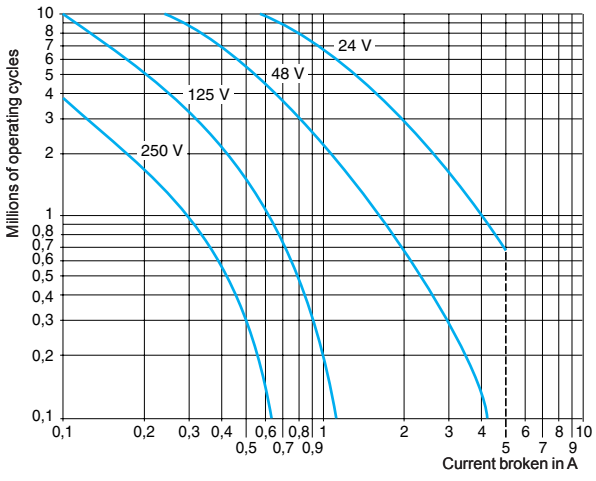

References : pages 13 and 14
Dimensions : pages 60 and 61
Schemes : pages 62 to 69

TeSys motor starters - open version
TeSys U starter-controllers
Control units

Characteristics of standard control units LUCA

Protection	Motor type		3-phase
	Conforming to standard		IEC/EN 60947-6-2, UL 508, CSA C22-2 n°14
Overload protection	Tripping class conforming to UL 508, IEC/EN 60947-6-2		10
	Frequency limits of the operational current	**Hz**	40…60
	Temperature compensation	**°C**	- 25…+ 70
	Protection against phase imbalance		Yes
Short-circuit protection	Tripping threshold		14.2 x Ir (setting current)
	Tripping tolerance		± 20 %

Characteristics of advanced control units LUCB, LUCC and LUCD

Control unit type			**LUCB**	**LUCC**	**LUCD**
Protection	Motor type		3-phase	Single-phase	3-phase
	Conforming to standard		IEC/EN 60947-6-2, UL 508, CSA C22-2 n°14	IEC/EN 60947-6-2, UL 508, CSA C22-2 n°14	IEC/EN 60947-6-2, UL 508, CSA C22-2 n°14
Overload protection	Tripping class conforming to UL 508, IEC/EN 60947-6-2		10	10	20
	Frequency limits of the operational current	**Hz**	40…60	40…60	40…60
	Temperature compensation	**°C**	- 25…+ 70	- 25…+ 55	- 25…+ 70
	Protection against phase imbalance		Yes	–	Yes
Short-circuit protection	Tripping threshold		14.2 x Ir max.	14.2 x Ir max.	14.2 x Ir max.
	Tripping tolerance		± 20 %	± 20 %	± 20 %

Characteristics of multifunction control units LUCM

Protection	Motor type		Parameters can be set: single-phase or 3-phase
	Conforming to standard		IEC/EN 60947-6-2, UL 508
Overload protection	Tripping class conforming to UL 508, IEC/EN 60947-6-2		5, 10, 15, 20, 25, 30 (selectable)
	Frequency limits of the operational current	**Hz**	50…60
	Temperature compensation	**°C**	- 25…+ 55
Communication interface for terminal on enclosure door	Physical interface		RS 485 multi-drop
	Connections		RJ45 on front panel
	Protocol		Modbus RTU
	Maximum transmission speed	**bit/s**	19 200 (self-configuration up to this value)
	Maximum return time	**ms**	200
Display	Type		LCD, 2 lines of 12 characters
	Language version		Multilanguage (English, French, German, Italian, Spanish)
	Precision		± 5 %
	Resolution		1 % of Ir
Auxiliary supply	External type	**V**	⎓ 24, with maximum ripple of ± 10 %.
	Heat dissipation	**W**	0.8

Configuration table for protection devices and alarms on multifunction control units LUCM

	Tripping	**Alarm**	**Adjustment of tripping threshold**		**Adjustment of time before tripping**		**Adjustment of alarm threshold**	
	Factory setting	**Factory setting**	**Range**	**Default value**	**Range**	**Default value**	**Range**	**Default value**
Overcurrent	Activated *(1)*	–	3…17 Ir	14.2	–	–	–	–
Overload	Activated *(1)*	Activated	0.5…32 A *(2)*	Ir min	Class: 5…30	5	10…100 % of the thermal state	85 %
Earth fault	Activated	Activated	0.2…5 Ir min	0.3 Ir min	0.1…1.2 s	0.1 s	0.2…5 Ir min	0.3 Ir min
Phase imbalance	Activated	Activated	10…30 %	10 %	0.2…20 s	5 s	10…30 %	10 %
Torque limitation	Deactivated	Deactivated	1…8 Ir	2 Ir	1…30 s	5 s	1…8 Ir	2 Ir
No-load running	Deactivated	Deactivated	0.3…1 Ir	0.5 Ir	1…200 s	10 s	0.3…1 Ir	0.5 Ir
Long starting time	Deactivated	Deactivated	1…8 Ir	Ir	1…200 s	10 s	1…8 Ir	Ir

Configuration of additional functions on multifunction control units LUCM

	Factory setting	**Setting range**
Reset	Manual	Manual, automatic or remote
Time before reset	120 s	1…1000 s
Type of load	3-phase motor	3-phase motor, single-phase motor
	Self-cooled	Self-cooled, force cooled
Language	English	English, French, German, Italian, Spanish
Display	Average current	Average current, thermal state of motor, current in phase 1 / 2 / 3, earth leakage current, phase imbalance, cause of last 5 faults

(1) This function cannot be deactivated.
(2) The setting range depends on the rating of the control unit used.

References : pages 19 and 20
Dimensions : pages 60 and 61
Schemes : pages 62 to 69

TeSys motor starters - open version

TeSys U starter-controllers

Limiter-disconnector, current limiter, thermal overload alarm function module and thermal overload fault signalling modules

Characteristics of limiter-disconnector LUA LB1

Rated insulation voltage (Ui) conforming to standard IEC/EN 60947-1		**V**	690	
Conventional thermal current (Ith) conforming to standard IEC/EN 60947-1		**A**	32	
Operating threshold	I rms	**kA**	50	
Breaking capacity		**V**	440	690
		kA	130	70
Mounting			Directly on the upstream terminals of the starter-controller	
Cabling				
Solid cable	1 conductor	**mm²**	1.5…10	
	2 conductors	**mm²**	1.5...6	
Flexible cable without cable end	1 conductor	**mm²**	1…10	
	2 conductors	**mm²**	1…6	
Flexible cable with cable end	1 conductor	**mm²**	1...6	
	2 conductors	**mm²**	1...6	
Screwdriver			Phillips n°2 or flat screwdriver Ø 6 mm	
Tightening torque		**N.m**	1.9…2.5	

Characteristics of current limiter LA9 LB920

Rated insulation voltage (Ui) conforming to standard IEC/EN 60947-1		**V**	690	
Conventional thermal current (Ith) conforming to standard IEC/EN 60947-1		**A**	63	
Operating threshold	I rms	**A**	1000	
Breaking capacity		**V**	440	690
		kA	100	35
Mounting			Separate	
Cabling				
Solid cable	1 conductor	**mm²**	1.5…25	
	2 conductors	**mm²**	1.5...10	
Flexible cable without cable end	1 conductor	**mm²**	1.5…25	
	2 conductors	**mm²**	2.5…10	
Flexible cable with cable end	1 conductor	**mm²**	1.5…16	
	2 conductors	**mm²**	1.5…4	
Screwdriver			Phillips n°2 or flat screwdriver Ø 6 mm	
Tightening torque		**N.m**	2.2	

Characteristics of thermal overload alarm function modules LUF W10

Activation threshold			Fixed at 88% of the thermal tripping state
Hysteresis between activation and switching off			5 %
Display			By LED on front panel
Supply			Powered by the control unit
Discrete output characteristics	Type		N/O contact
	AC-15		230 V max; 400 VA 100 000 operating cycles
	DC-13		24 V; 50 W 100 000 operating cycles
Conventional thermal current (Ith)	For ambient temperature θ < 70 °C	**A**	2
Short-circuit protection	Conforming to IEC/EN 60947-5-1	**A**	gG fuse: 2

Characteristics of thermal overload fault signalling and reset modules

Module type			**LUF DH11**	**LUF DA01**	**LUF DA10**
Fault signalling			By LED on front panel		
External power supply		**V**	∿/⎓ 24… 240		
Module consumption		**mA**	7 at ⎓ 24 1.1 at ∿ 240		
Discrete outputs	Type		1 N/C+ 1 N/O	1 N/C	1 N/O
	AC-15		230 V max; 400 VA 100 000 operating cycles		
	DC-13		24 V; 50 W 100 000 operating cycles		
Conventional thermal current (Ith)	For ambient temperature θ < 70 °C	**A**	2		
Short-circuit protection	Conforming to IEC/EN 60947-5-1	**A**	gG fuse: 2		
Reset input	Conductor c.s.a.	**mm²**	0.2 min		
	Length	**m**	500 (R = 50 Ω , L = 52.8 mH, Cp = 93 pF)		

References : pages 16
Dimensions : pages 60 and 61
Schemes : pages 62 to 69

Characteristics of motor load indication function module LUF V2

Analogue output			4 - 20 mA
Signal delivered			Value of I average/Ir ratio within the range of 0 to 2 for LUCB and LUCD
			Value of I average/Ir ratio within the range of 0 to 3 for LUCC
Load impedance	Minimum	**kΩ**	–
	Maximum	Ω	500
	Typical	Ω	100
Signal characteristics with advanced control unit	Precision		± 6 %
Signal characteristics with multifunction control unit	Precision		± 10 %
	Resolution		1 % of Ir
Supply			External ⎓ 24 V

Characteristics of AS-Interface communication modules ASILUF C5 and ASILUF C51

Module type			**ASILUF C5**	**ASILUF C51**
Product certification			AS-Interface V2.1 n° 52901	AS-Interface V2.1 n° 52303
AS-Interface profile			7.D.F.0	7.A.7.E
Ambient air temperature		**°C**	Operation - 25…+ 70	
Cycle time		**ms**	5	10
Addressing			31 slaves	62 slaves
AS-Interface supply		**V**	29.5...31.5	
Current consumption	On the AS-Interface bus	**mA**	Normal operation: 25	
		mA	Fault condition: 30	
	On 24 V supply for the outputs	**mA**	200	
Auxiliary supply		**V**	⎓ 24 ± 30 %	
Number of outputs			2 dedicated to starter-controller coil operation	
Switching capacity of the solid state outputs			0.5 A/24 V (outputs protected against short-circuits)	
Indication/diagnostics			By 2 LEDs on front panel	

Characteristics of Modbus communication module LUL C03●

Module type			**LUL C031**	**LUL C033**
Physical interface			RS 485 multi-drop	
Connections			RJ45 on front panel	
Protocol			Modbus RTU	
Maximum transmission speed		**bit/s**	19 200 (self-configuration up to this value)	
Maximum return time		**ms**	30	
Addressing			By switches: from 0...31	
Ambient air temperature		**°C**	Operation - 25…+ 55	
Discrete inputs	Number		–	2 (to be assigned according to the configuration)
	Supply	**V**	–	⎓ 24
	Input current	**mA**	–	7
Nominal input values	Voltage	**V**	⎓ 24 (positive logic)	
	Current	**mA**	7	
Response time	Change to state 1	**ms**	10 (± 30 %)	
	Change to state 0	**ms**	10 (± 30 %)	
Input type			Resistive	
Solid state outputs	Number		3, of which 2 dedicated to starter-controller coil operation	
	Supply	**V**	⎓ 24	
	Max. current	**mA**	500	
Protection	gI fuse	**A**	1	
Switching capacity			0.5 A/24 V	
Indication/diagnostics			By 3 LEDs on front panel	

Characteristics of CANopen, Profibus DPand DeviceNet communication modules

Communication module				Profibus DP LUL C07	CANopen LUL C08	DeviceNet LUL C09
Services	Conformity class			NA	S 20 (Schneider Electric)	NA
	Standard			Profibus DP	CIADS-301 V4.02 DR 303-2	IEC 62026-1, overvoltage category III, degree of pollution: 3
	Profile			LVSG V1.0 MS (Motor Starter) and MMS (Motor Management Starter)	–	ODVA (Open DeviceNet Vendor Association) MS (Motor Starter)
	Protocol			Profibus DP	CAN 2.0A (2B passive)	CAN 2.0A (2B passive)
	Address			1…125	0…127 (by switches)	0…63
Structure	Physical interface			9-way SUB-D male	9-way SUB-D female	"Open Style" connector
	Binary rate			9600 Kbits/s…12 Mbits/s	10, 20, 50, 125, 250, 500 and 1000 Kbits/s (by switches)	125…500 kbaud
	Cables			2 shielded twisted pairs		
Supply for the discrete outputs and control	⎓ 24 V		**V**	20…28		
	Current consumption		**A**	1.5 (max)		
	Protection by gI fuse		**A**	2		
Ambient air temperature			**°C**	Operation -25…+55		
Logic inputs	Number			2 (to be assigned according to the configuration)		
	Supply		**V**	⎓ 24		
	Input current		**mA**	7		
	Nominal input values	Voltage	**V**	⎓ 24 (positive logic)		
		Current	**mA**	7		
	Response time	Change to state 1	**ms**	10 (± 30%)		
		Change to state 0	**ms**	10 (± 30%)		
	Input type			Resistive		
Discrete outputs	Number			3, of which 2 dedicated to starter-controller coil operation		
	Max. current		**mA**	500		
	Short-circuit protection			Yes		
	Switching capacity			0.5 A / ⎓ 24 V		
Indication/diagnostics				By 3 LEDs on front panel		

Characteristics of Advantys STB communication module LUL C15

Physical interface				CAN
Connections				Fire Wire
Protocol				CAN 2.0 and CAN 2.B (passive mode)
Transmission speed			**kbit/s**	800
Addressing				Self-addressing
Supply for the discrete outputs and control	⎓ 24 V		**V**	20…28
	Current consumption		**A**	1.5 (max)
	Protection by gI fuse		**A**	2
Ambient air temperature			**°C**	Operation - 25…+ 55
Discrete inputs	Number			2 (to be assigned according to configuration)
	Supply		**V**	⎓ 24
	Input current		**mA**	7
	Nominal input values	Voltage	**V**	⎓ 24 (positive logic)
		Current	**mA**	7
	Response time	Change to state 1	**ms**	10 (± 30 %)
		Change to state 0	**ms**	10 (± 30 %)
	Input type			Resistive
Discrete outputs	Number			3, of which 2 dedicated to starter-controller coil operation
	Max. current		**mA**	500
	Short-circuit protection			Yes
	Switching capacity			0.5 A / ⎓ 24 V
Indication/diagnostics				By 3 LEDs on front panel

Connection characteristics

Module type				LUF W10, LUF DH11, LUF DA01 and LUF DA10	LUF V2	ASILUF C5 and ASILUF C51	
						Inputs and 24 V auxiliary supply	Outputs
Connectors		Pitch		5.08	3.81	5.08	3.81
Flexible cable without cable end		1 conductor	**mm²**	0.2…1.5	0.14…1	0.2…1.5	0.14…1
		2 identical conductors	**mm²**	0.2…1	0.14…0.75	0.2…1	0.14…0.75
Flexible cable with cable end	Without insulated ferrule	1 conductor	**mm²**	0.25…1.5	0.25…1	0.25…1.5	0.25…1
		2 identical conductors	**mm²**	0.25…1	0.25…0.34	0.25…1	0.25…0.34
	With insulated ferrule	1 conductor	**mm²**	0.25…1.5	0.25…0.5	0.25…1.5	0.25…0.5
		2 identical conductors (Use a double cable end)	**mm²**	0.5…1	0.5	0.5…1	0.5
Solid cable without cable end		1 conductor	**mm²**	0.2…1.5	0.14…1	0.2…1.5	0.14…1
		2 identical conductors	**mm²**	0.2…1	0.14…0.5	0.2…1	0.14…0.5
Conductor size		1 conductor		AWG 24… AWG 16	AWG 26… AWG 16	AWG 24… AWG 16	AWG 26… AWG 16
Tightening torque			**N.m**	0.5…0.6	0.20…0.25	0.5…0.6	0.20…0.25
Flat screwdriver			**mm**	3.5	2.5	3.5	2.5

Module type				LUL C031, LUL C033, LUL C08 and LUL C15	LUFC 00	LUL C09	
						Inputs and 24 V auxiliary supply	Connection on the bus
Connectors		Pitch		3.81	3.81	3.81	5 (Open Style) DeviceNet
Flexible cable without cable end		1 conductor	**mm²**	0.14…1	0.14…1	0.14…1	0.2…2.5
		2 identical conductors	**mm²**	0.14…0.75	0.14…0.75	0.14…0.75	0.5…1.5
Flexible cable with cable end	Without insulated ferrule	1 conductor	**mm²**	0.25…1	0.25…1	0.25…1	0.25…2.5
		2 identical conductors	**mm²**	0.25…0.34	0.25…0.34	0.25…0.34	0.25…1
	With insulated ferrule	1 conductor	**mm²**	0.25…0.5	0.25…0.5	0.25…0.5	0.25…2.5
		2 identical conductors (Use a double cable end)	**mm²**	0.5	0.5	0.75	0.5…1.5
Solid cable without cable end		1 conductor	**mm²**	0.14…1	0.14…1	0.14…1	0.2…2.5
		2 identical conductors	**mm²**	0.14…0.5	0.14…0.5	0.14…0.5	0.14…0.5
Conductor size		1 conductor		AWG 26… AWG 16	AWG 26… AWG 16	AWG 26… AWG 16	AWG 24… AWG 16
Tightening torque			**N.m**	0.20…0.25	0.20…0.25	0.20…0.25	0.5…0.6
Flat screwdriver			**mm**	2.5	2.5	2.5	3.5

TeSys motor starters - open version
TeSys U starter-controllers

Dimensions

Starter-controllers

LUB: non-reversing

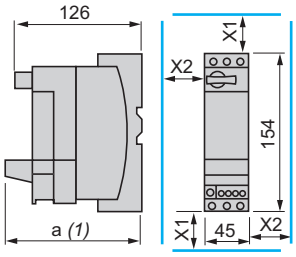

Rail mounting

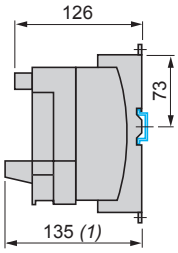

Screw fixing

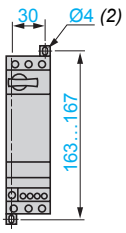

	a
With Modbus module	135
With Advantys STB, CANopen, Profibus DP or DeviceNet modules	147

Minimum electrical clearance:
X1 = 50 mm for Ue = 440 V and 70 mm for Ue = 500 and 690 V, X2 = 0

LU2B: reversing

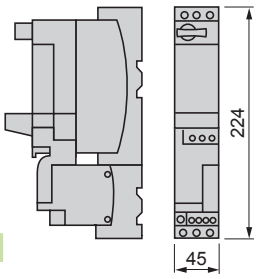

Rail mounting

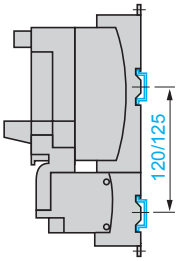

Screw fixing

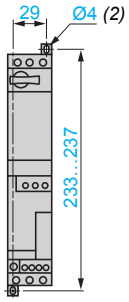

Reverser block for mounting separately from power base

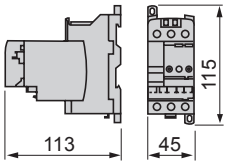

Rail mounting

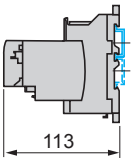

Screw fixing

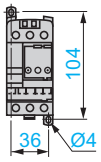

Sets of busbars and plug-in power sockets

GV2 G445 and GV2 G454

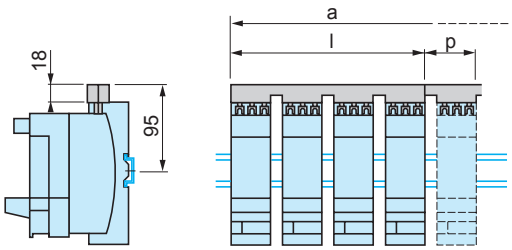

	l	P
GV2 G445 (2 x 45)	179	45
GV2 G454 (2 x 54)	206	54

	a			
Number of tap-offs	5	6	7	8
GV2 G445 (2 x 45)	224	269	314	359
GV2 G454 (2 x 54)	260	314	368	422

GV2 G●●● with terminal block GV1 G09

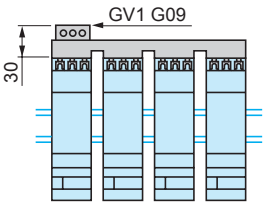

GV2 G554

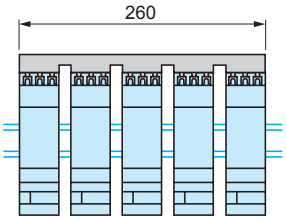

GV2 G245 and G254

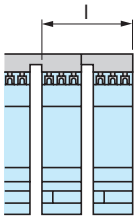

	l
GV2 G245 (2 x 45)	89
GV2 G254 (2 x 54)	98

GV2 G345 et G354

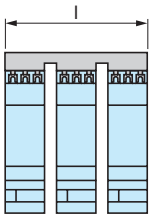

	l
GV2 G345 (2 x 45)	**134**
GV2 G354 (2 x 54)	**152**

AK5 JB144

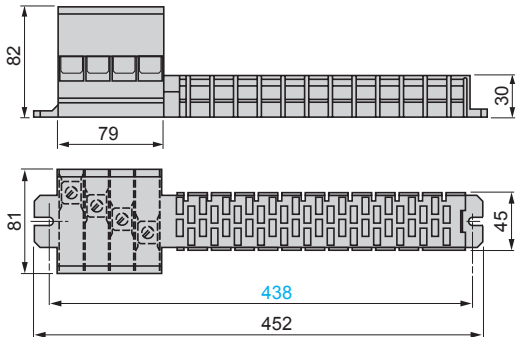

AK5 PC13, PC33, PC33L

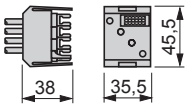

(1) Depth with communication module.
(2) Retractable fixing lugs.

Dimensions, mounting

Limiter-disconnector LUA LB1
Disconnector LUA LB10

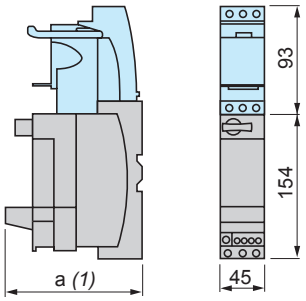

	a
With Modbus module	135
With Advantys STB, CANopen, Profibus DP or DeviceNet modules	147

Current limiter LA9 LB920

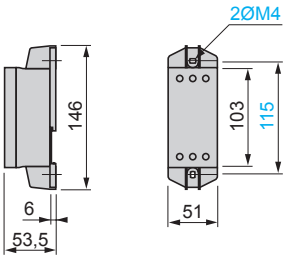

Door interlock mechanisms

LU9 AP20

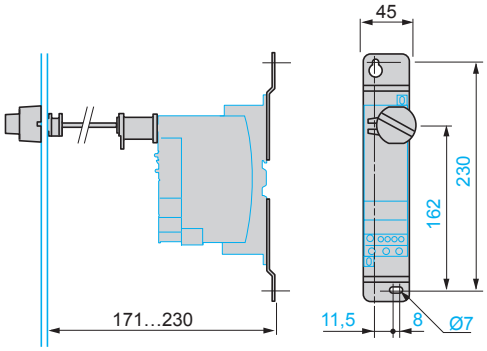

LU9 AP00

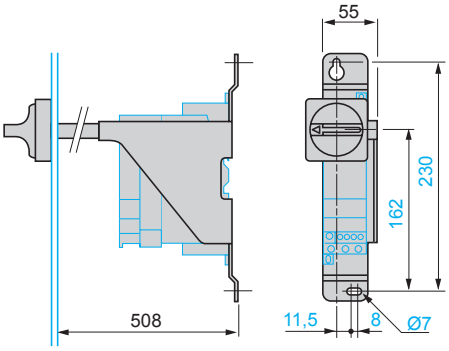

Door cut-out

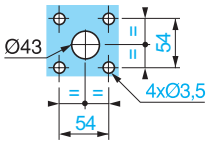

Addressing consoles

XZ MC11

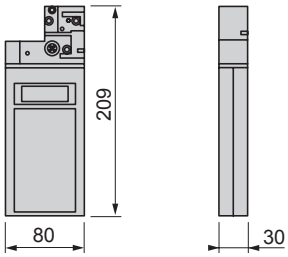

ASI TERV2

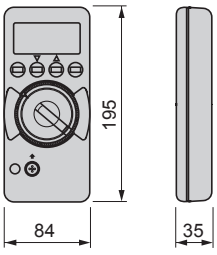

Splitter boxes

LU9 GC3 (Modbus) and LU9 G02

Rail mounting Screw fixing

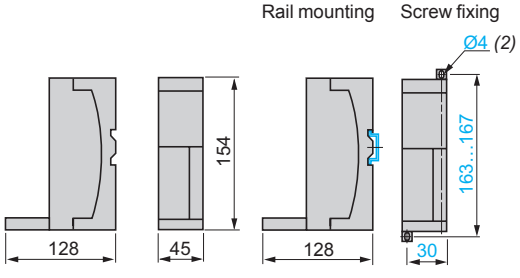

LU9 GC7 (Profibus DP)

Rail mounting Screw fixing

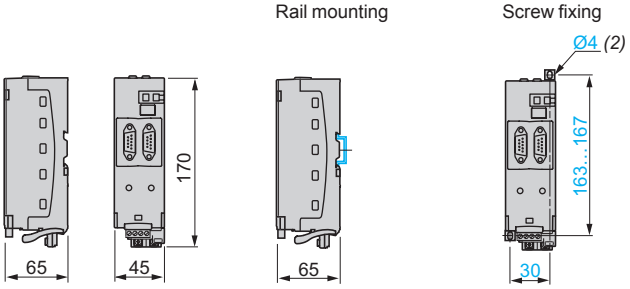

(1) Depth with communication module.
(2) Retractable fixing lugs.

TeSys motor starters - open version
TeSys U starter-controllers

Starter-controllers, 12 or 32 A

With standard, advanced or multifunction control unit

Non-reversing

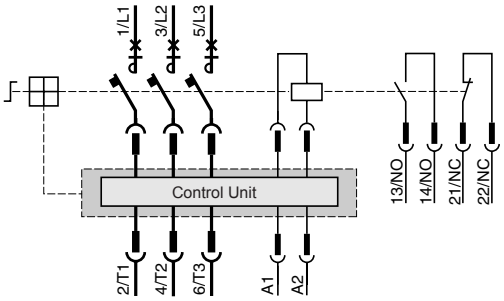

Reversing

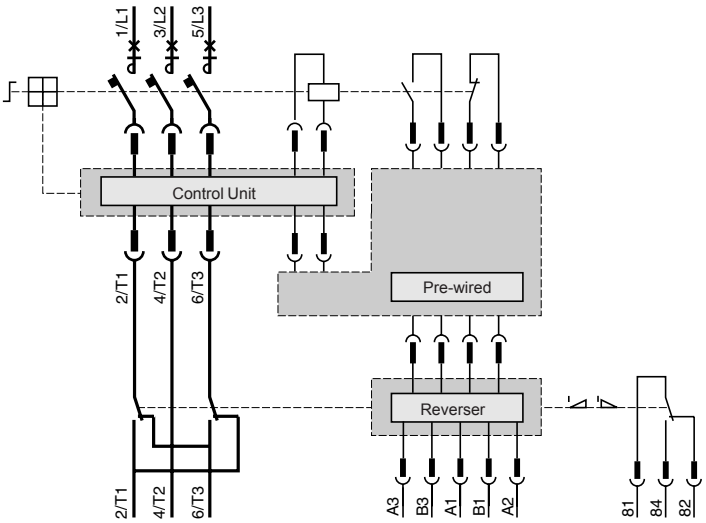

With control unit LUCC or LUCM

Connection of a single-phase motor

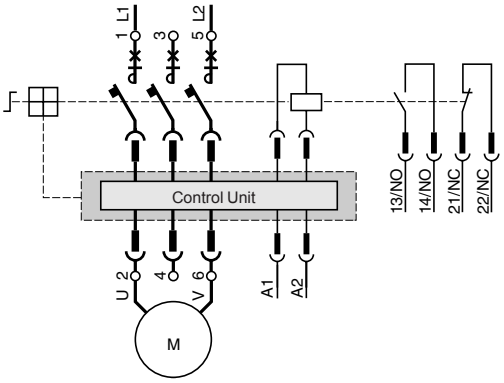

Control terminal block

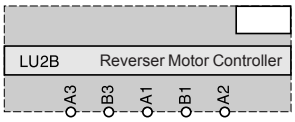

Reverser blocks

LU2M

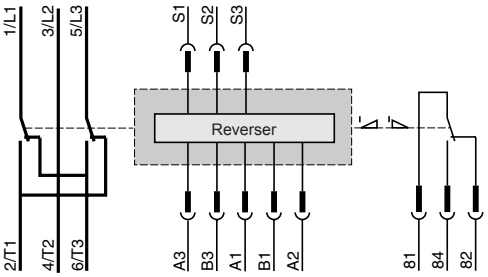

Control terminal block

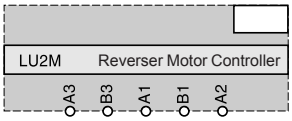

LU6M

Control terminal blocks

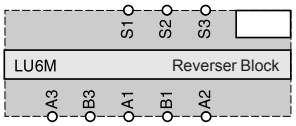

With pre-wired connector LU9M RC

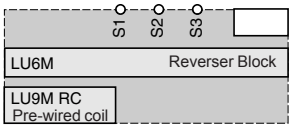

Basic scheme

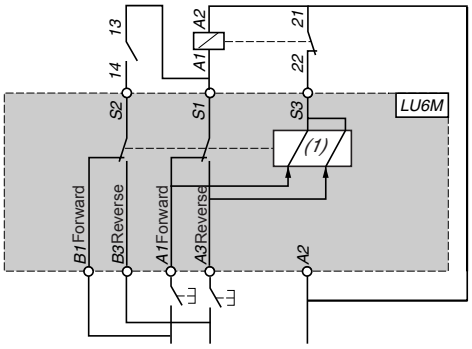

S1 *Start next stage*
S2 *Electrical interlocking*
S3 *Maintaining contact*
B1 *Maintain forward running*
B3 *Maintain reverse running*
A1 *Pulse forward running*
A2 *Common*
A3 *Pulse reverse running*
(1) Electronically operated bistable electromagnet.

Add-on contact blocks

LUA1 C11

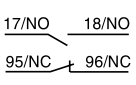

LUA1 C20

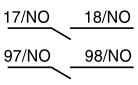

LUA8 E20

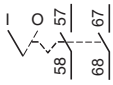

Add-on contact modules

LUFN 20

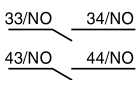

LUFN 11

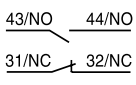

LUFN 02

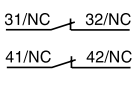

Control units

Standard control units LUCA

Basic scheme

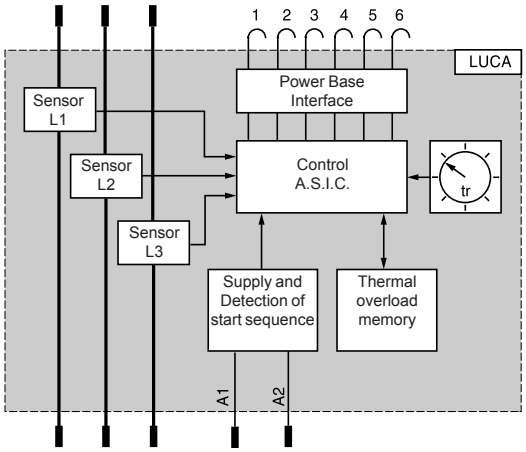

1 and 2 *Trips*
3 and 4 *Electromagnet*
5 *Power base rating*
6 *N/C*

Advanced control units (LUCB, LUCC, LUCD)

Basic scheme

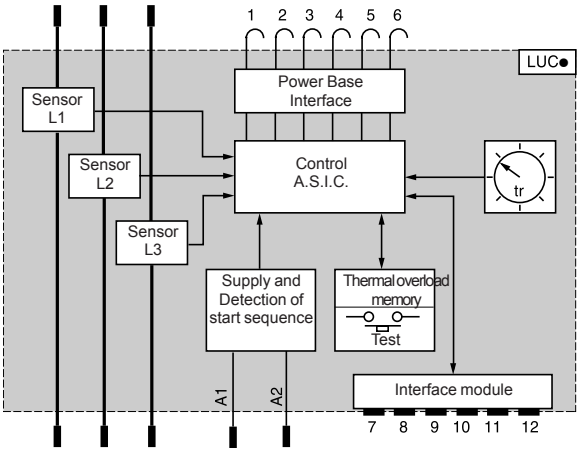

1 and 2 *Trips*
3 and 4 *Electromagnet*
5 *Power base rating*
6 *N/C*
7 *Earth*
8 *Thermal status/Set*
9 *Reset mode/Reset*
10 *(Im/Ir)*
11 *Vc2*
12 *Vc1*

Multifunction control units LUCM

Control terminal block

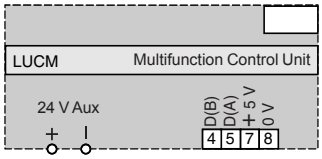

Basic scheme

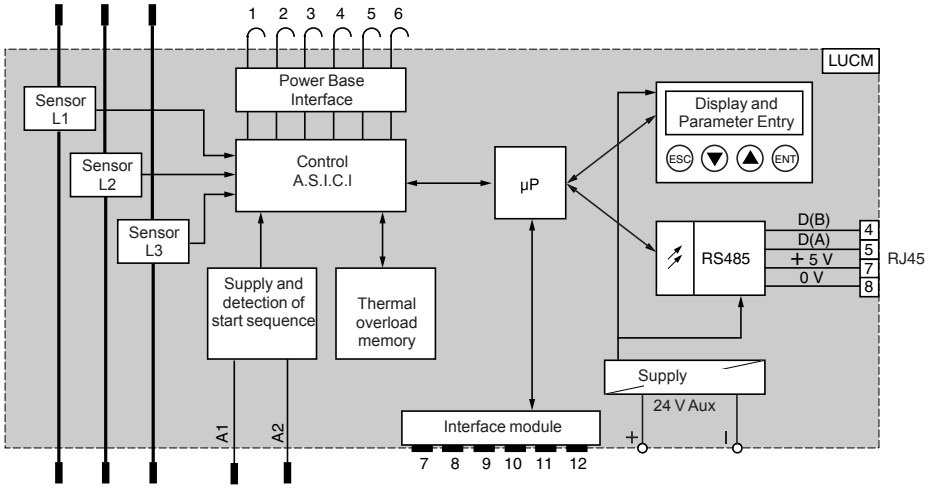

1 and 2 *Trips*
3 and 4 *Electromagnet*
5 *Power base rating*
6 *N/C*
7 *Earth*
8 *N/C*
9 *Earth*
10 *(Im/Ir)*
11 *Rx/Tx*
12 *Vc1*

Function modules

Alarm
LUF W10

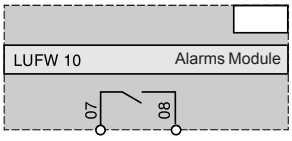

Basic scheme

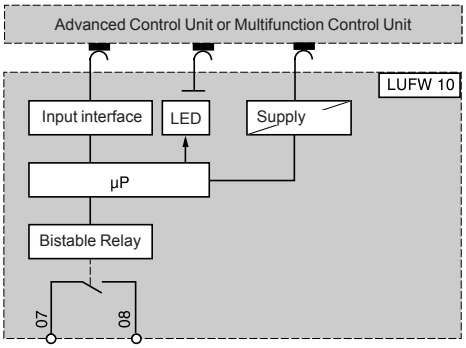

~ 250 V, 2 A
⎓ 24 V, 2 A

Indication of motor load
LUF V2

4-20 mA output

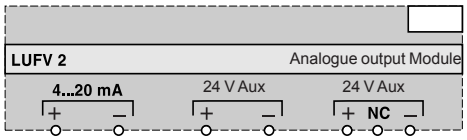

Basic scheme

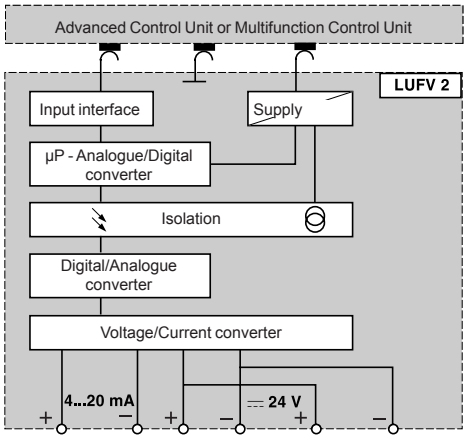

100 W < load < 500 W ⎓ 30 V max and 40 mA min

Communication modules

Communication modules ASILUF C5 and ASILUF C51

Without pre-wired coil connection

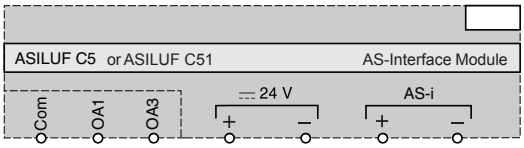

With pre-wired coil connection LU9B N11C

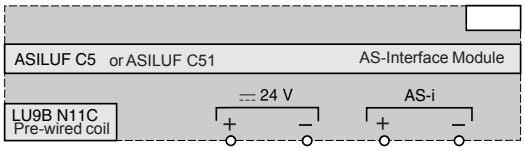

With pre-wired coil connection LU9M RC

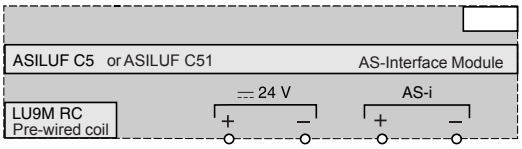

Basic scheme

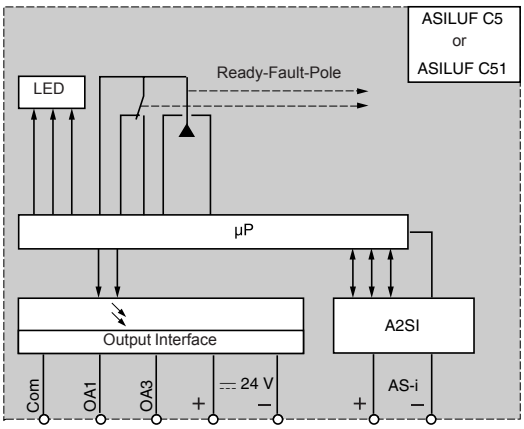

Communication modules (continued)

Modbus communication module LUL C031

Without pre-wired coil connection

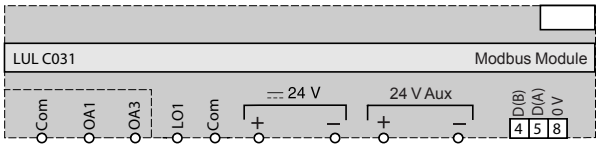

With pre-wired coil connection LU9B N11C

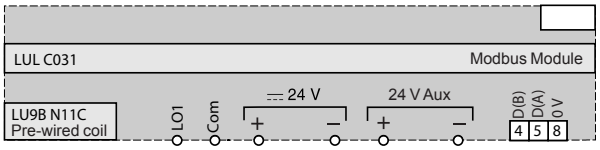

With pre-wired coil connection LU9M RC

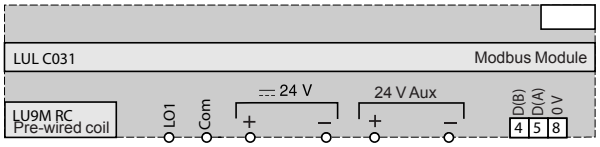

Basic scheme

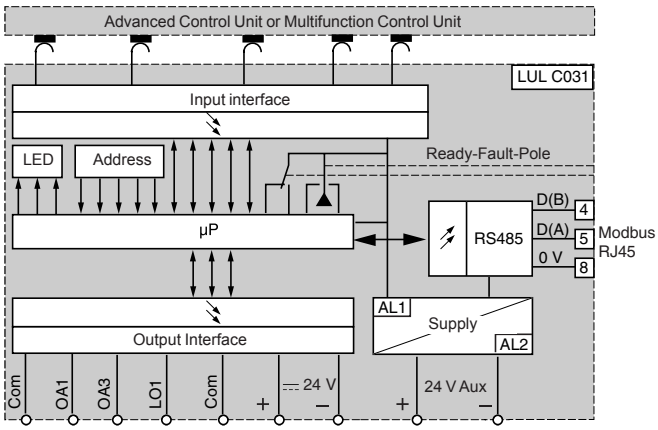

Modbus communication module LUL C033

Without pre-wired coil connection

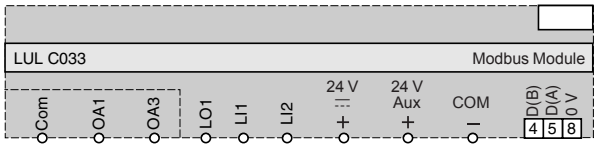

With pre-wired coil connection LU9B N11C

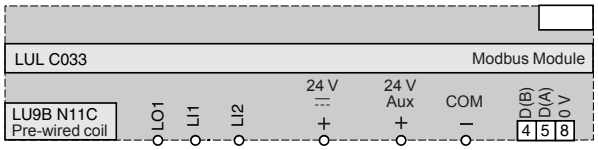

With pre-wired coil connection LU9M RC

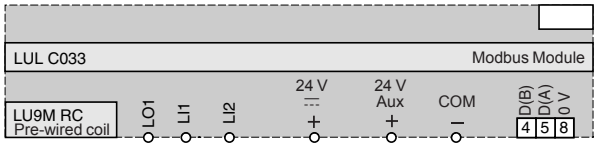

Basic scheme

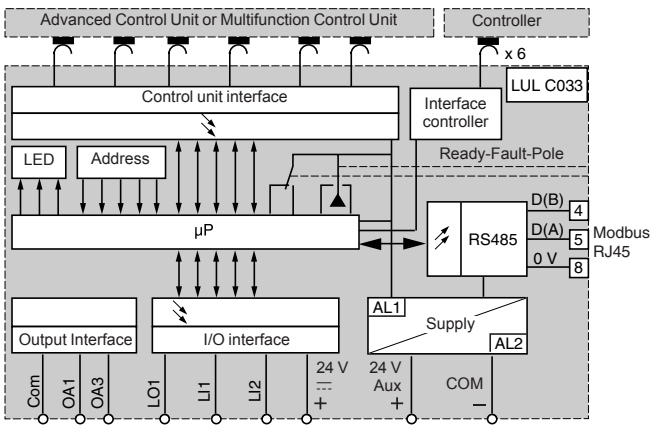

Communication modules (continued)

Profibus DP communication module LUL C07

Without pre-wired coil connection

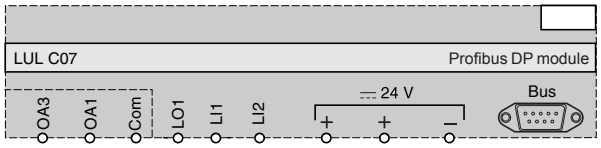

With pre-wired coil connection LU9B N11LC

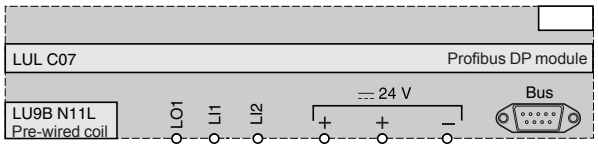

With pre-wired coil connection LU9M RL

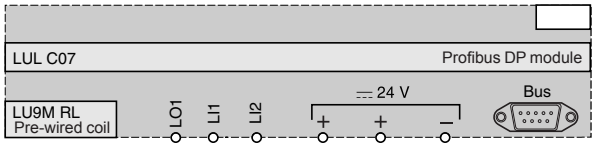

Basic scheme

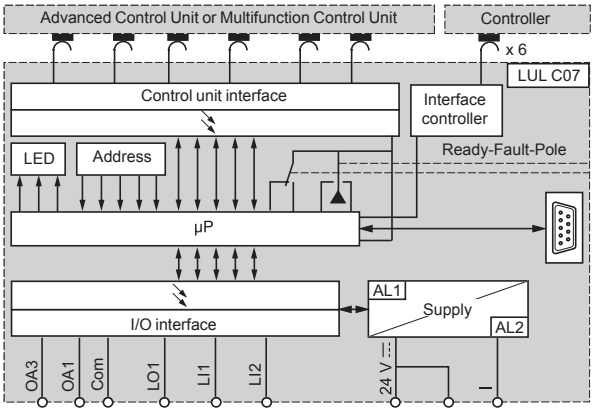

CANopen communication module LUL C08

Without pre-wired coil connection

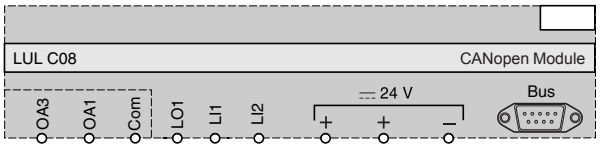

With pre-wired coil connection LU9B N11LC

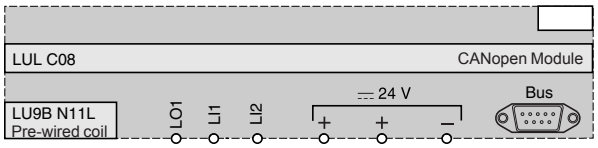

With pre-wired coil connection LU9M RL

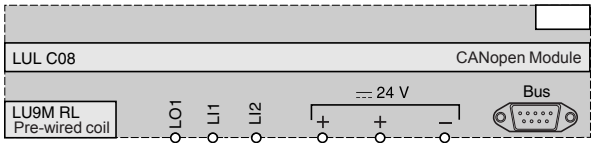

Basic scheme

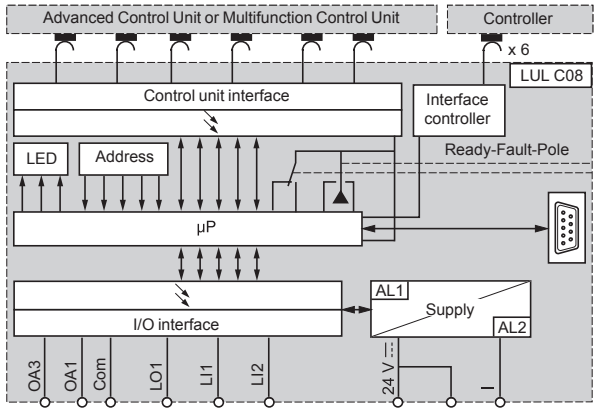

DeviceNet communication module LUL C09

Without pre-wired coil connection

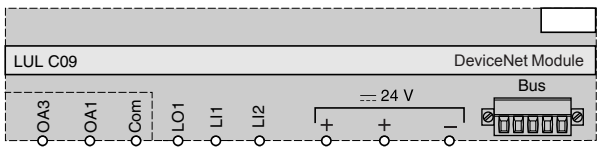

With pre-wired coil connection LU9B N11LC

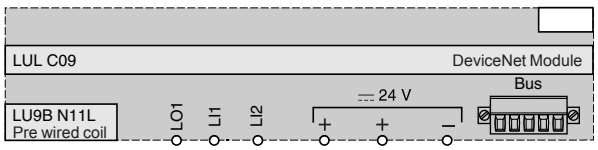

With pre-wired coil connection LU9M RL

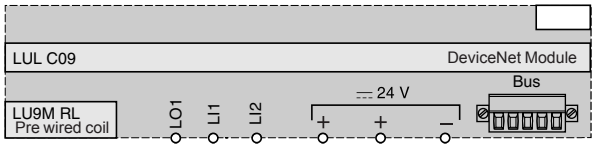

Basic scheme

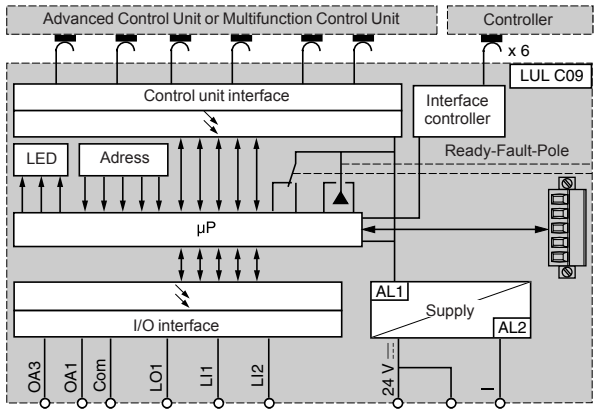

Communication modules (continued)

Advantys STB communication module LUL C15

Without pre-wired coil connection

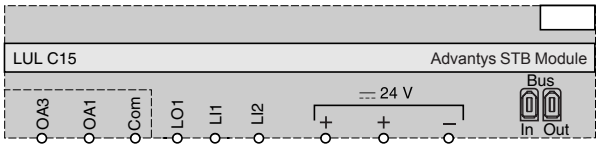

With pre-wired coil connection LU9B N11L

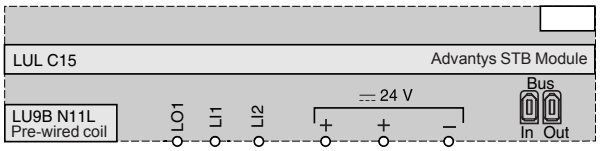

With pre-wired coil connection LU9M RL

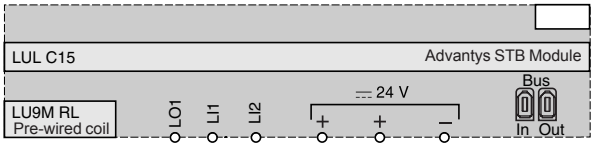

Basic scheme

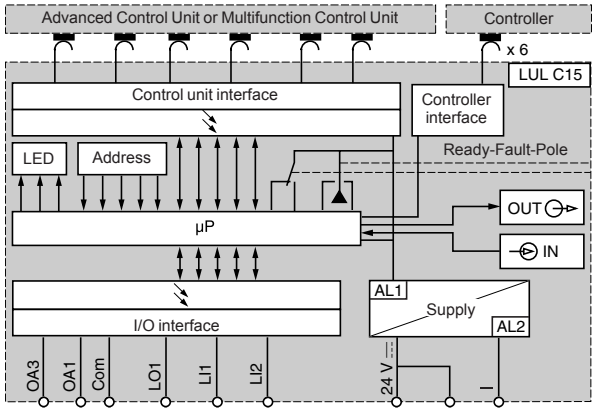

Parallel wiring modules

Without pre-wired coil connection

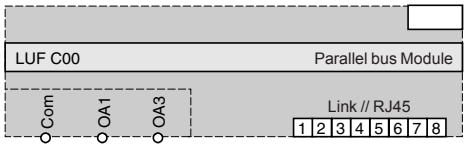

With pre-wired coil connection LU9B N11C

With pre-wired coil connection LU9M RC

Basic scheme

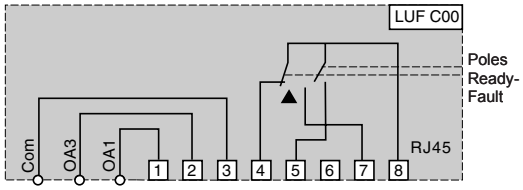

1 *Forward running*
2 *Reverse running*
3 *Output common*
4 *Selector in position* ⏻
5 *Pole state*
6 *Reserved*
7 *Fault*
8 *Input common*

Profibus DP power supply module LU9 GC7

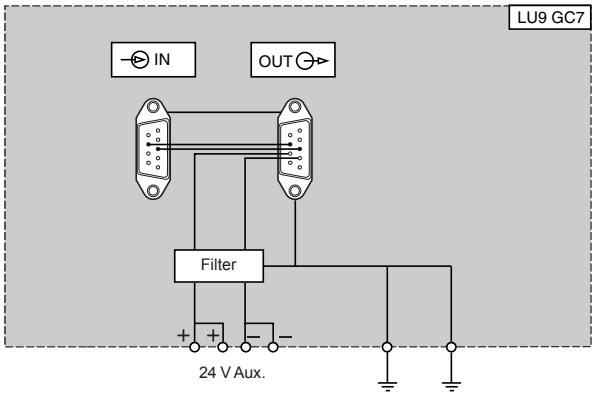

Communication modules (continued)

Wiring hub and splitter box

Modbus hub LU9GC3

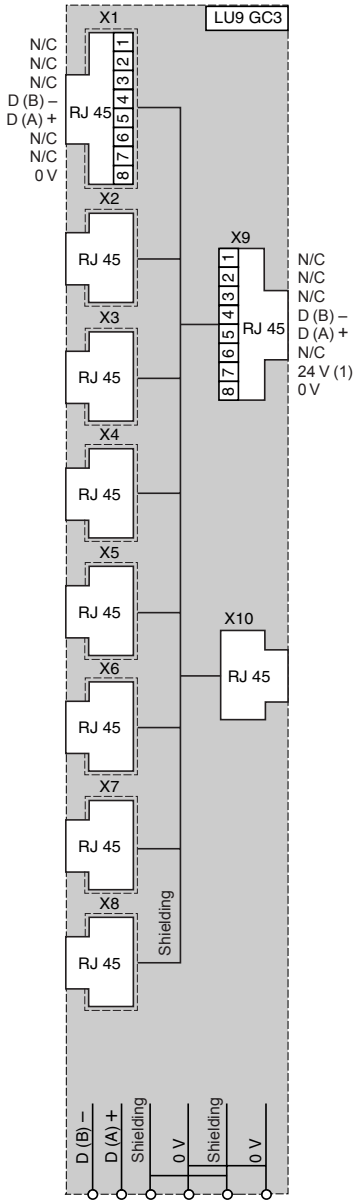

Parallel wiring splitter box LU9 G02

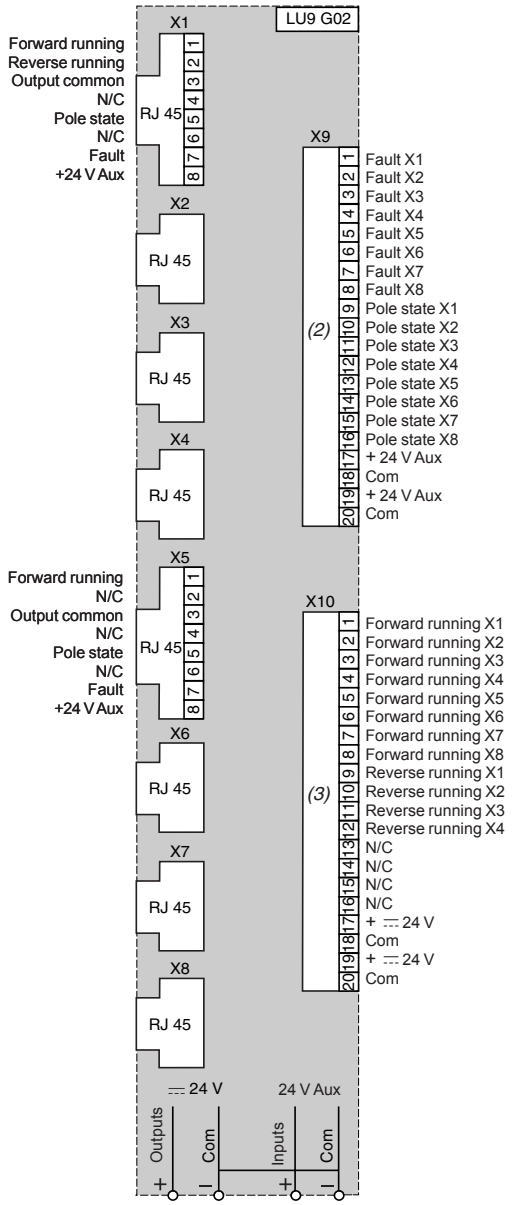

Colours of TSX CDP●●● connection cable wires *(4)*

1	White
2	Brown
3	Green
4	Yellow
5	Grey
6	Pink
7	Blue
8	Red
9	Black
10	Violet
11	Grey-pink
12	Red-blue
13	White-green
14	Brown-green
15	White-yellow
16	Yellow-brown
17	White-grey
18	Grey-brown
19	White-pink
20	Pink-brown

(1) Not connected on connectors X1 to X8. Only present on RJ45 IN and OUT connectors.
(2) 20-way HE 10 input connector.
(3) 20-way HE 10 output connector.
(4) Wire colours and corresponding HE 10 connector pin numbers.

Gateways

LUF P1

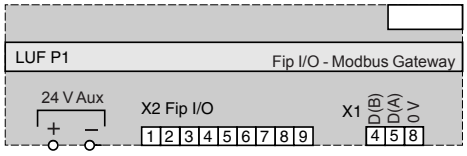

LUF P7

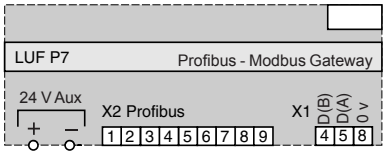

LUF P9

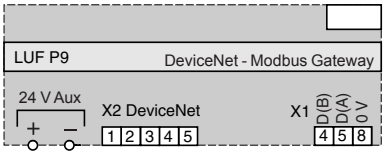

Data profile under AS-Interface						
Control unit present in the product				Standard LUCA	Advanced LUCB, CC, CD	Multifunction LUCM
Status		D0	Ready (available)	■	■	■
		D1	Poles closed (running)	■	■	■
Commands		D0	Start - forward running	■	■	■
		D1	Reverse running	■	■	■

Main registers accessible with Modbus, CANopen, Advantys STB, Profibus DP and DeviceNet communication modules For other registers and for further information, please consult the User's Manual *Communication variables* on the website www.telemecanique.com						
Control unit present in the product				Standard	Advanced	Multifunction
Marking	Register 0…Register 99	Words…Bits	Commercial reference, serial number, software version	■	■	■
Log	Register 100…Register 450	Words…Bits	Fault log, Operating log, Log of last 5 trips			■
Status	Register 451…Register 464	Words…Bits	Alarm signalling (bits), Fault signalling (bits)	■	■	■
Values	Register 465…Register 473	Words	Irms phase 1, phase 2, phase 3. Motor load, thermal status Earth leakage current. Phase imbalance and phase failure			■
	Register 474…Register 599	Words…Bits	Reserved			
Configuration	Register 600…Register 699	Words…Bits	Protection and alarm thresholds, fallback mode and reset mode		■	■
Commands	Register 700…Register 714	Words…Bits	Commands	■	■	■

Status and values	Register 452	Bit 0	Short-circuit fault		■	■
		Bit 1	Overcurrent fault		■	■
		Bit 2	Thermal overload fault		■	■
	Register 455	Bit 0	Ready (available)	■	■	■
		Bit 1	Poles closed	■	■	■
		Bit 2	Fault	■	■	■
		Bit 3	Alarms		■	■
		Bit 4	Tripped ("TRIP" position)			
		Bit 5	Fault acknowledgement allowed			■
		Bit 6	Reserved			
		Bit 7	Motor running		■	■
		Bit 8	Motor current % (bit 0)		■	■
		Bit 9	Motor current % (bit 1)		■	■
		Bit 10	Motor current % (bit 2)		■	■
		Bit 11	Motor current % (bit 3)		■	■
		Bit 12	Motor current % (bit 4)		■	■
		Bit 13	Motor current % (bit 5)		■	■
		Bit 14	Reserved			
		Bit 15	Motor starting		■	■
	Register 461	Bit 3	Thermal overload alarm		■	■
	Register 465	Word	Thermal status value			■
	Register 466	Word	Motor load value (Im/Ir)		■	■

Configuration	Register 602	Bit 0	Manual reset on thermal overload fault		■	■
		Bit 1	Remote reset on thermal overload fault		■	■
		Bit 2	Automatic reset on thermal overload fault		■	■
	Register 682	Value 0	Fallback mode validation	■	■	■
		Value 1	Outputs OA1 and OA3 unchanged	■	■	■
		Value 2	Outputs OA1 and OA3 forced to 0	■	■	■
		Value 3	Outputs OA1 and OA3 unchanged, signalling existence of communication failure	■	■	■
		Value 4	Outputs OA1 forced to 1 and OA3 unchanged	■	■	■
		Value 5	Outputs OA3 forced to 1 and OA1 unchanged	■	■	■

Commands	Register 700	Bit 0	LO1 output command	■	■	■
	Register 704	Bit 0	OA1 output command	■	■	■
		Bit 1	OA3 output command	■	■	■
		Bit 2	Reserved			
		Bit 3	Fault acknowledgement		■	■
		Bit 4	Reserved			
		Bit 5	Trip test			■
		Bit 6…15	Reserved			

■ *Data accessible*

TeSys motor starters - open version

TeSys U starter-controllers

Non-reversing

Non-reversing starter-controllers LUB

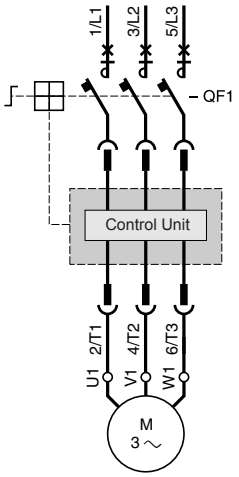

2-wire control via 2-position switch

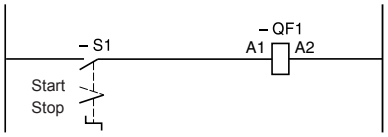

3-wire control, pulsed start with maintaining contact

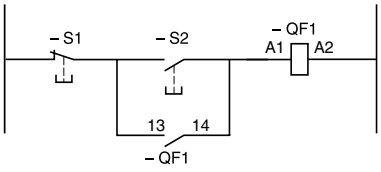

Connection of a motor load indicator module LUFV 2

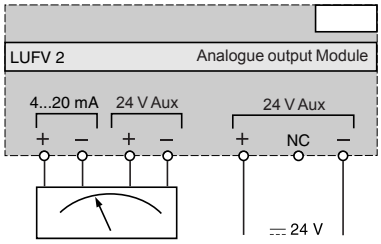

Connection of thermal overload fault signalling modules LUF DA10

Automatic reset

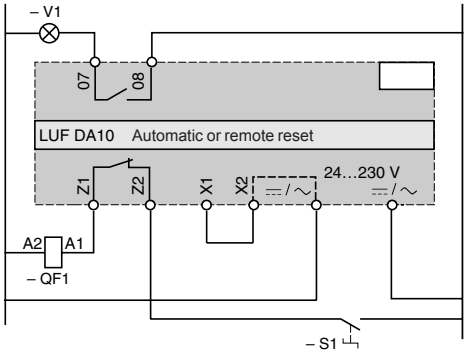

Remote reset

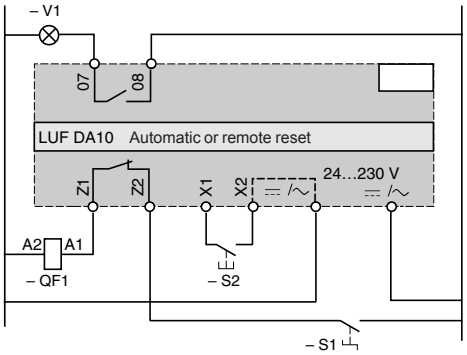

Control via Modbus communication module LUL C031

Without pre-wired coil connection

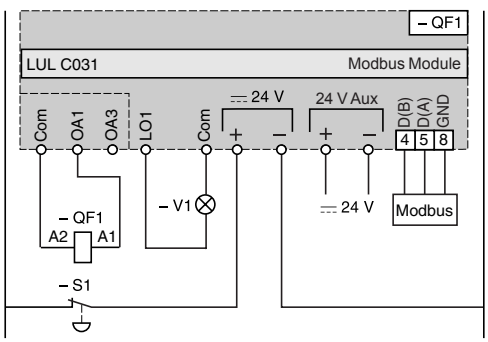

Control via Modbus communication module LUL C033

Without pre-wired coil connection

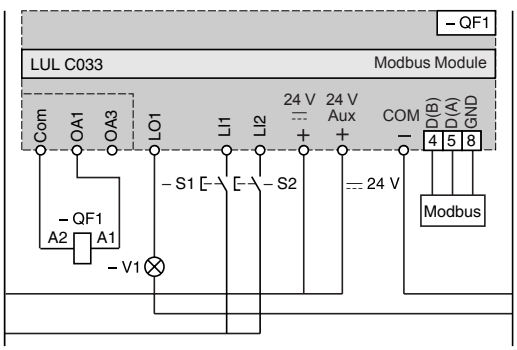

Non-reversing starter controllers LUB (continued)

Control by communication modules ASILUF C5 and ASILUF C51

Without pre-wired coil connection

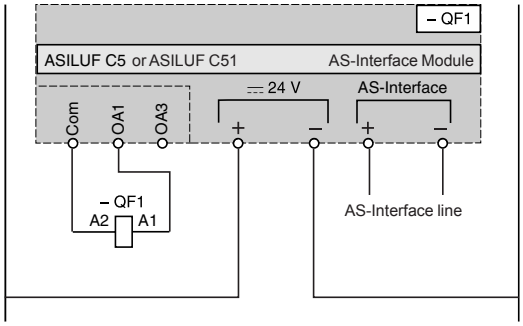

Without pre-wired coil connection
With local control

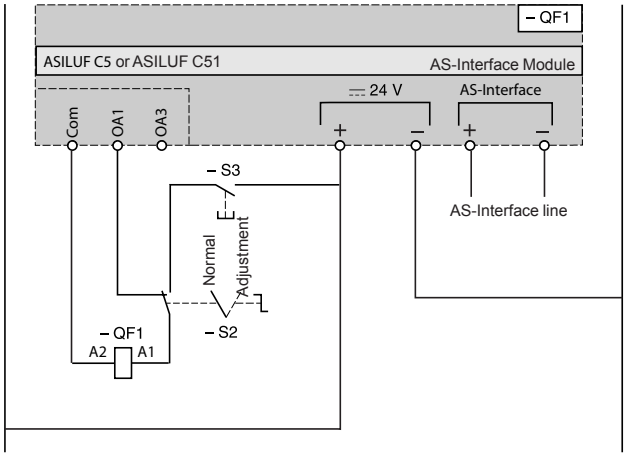

With pre-wired coil connection LU9B N11C

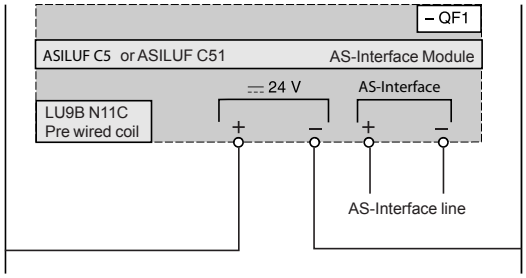

Without pre-wired coil connection
With local control

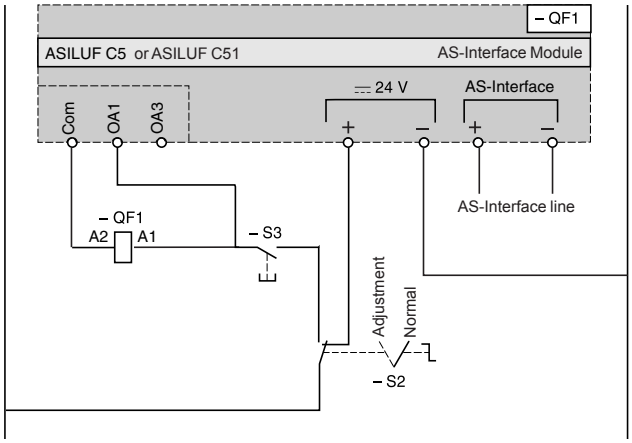

Without pre-wired coil connection
With multifunction control unit LUCM

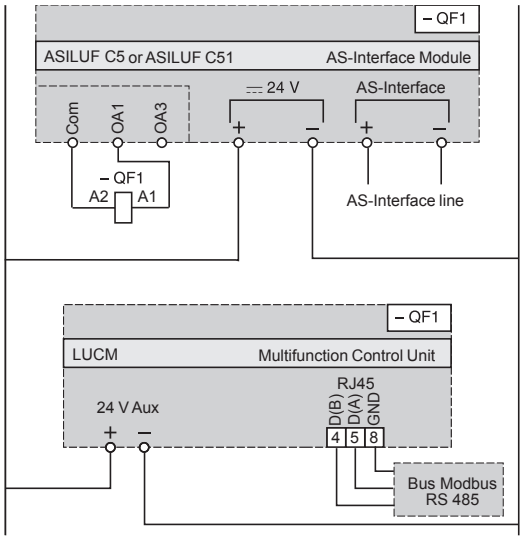

Reversing starter-controllers LUB

2-wire control via 3-position switch

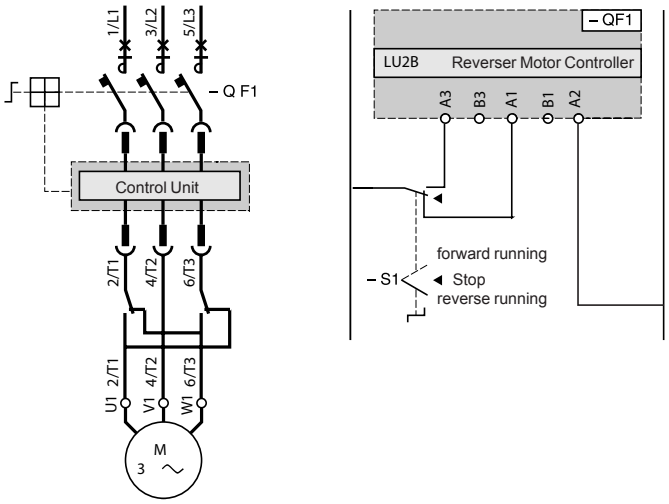

3-wire control, pulsed start with maintaining contact

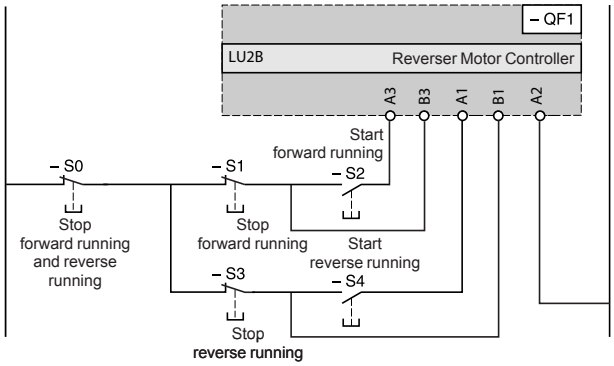

Control by communication modules ASILUF C5 and ASILUF C51

With pre-wired coil connection LU9M RC
With multifunction control unit LUCM

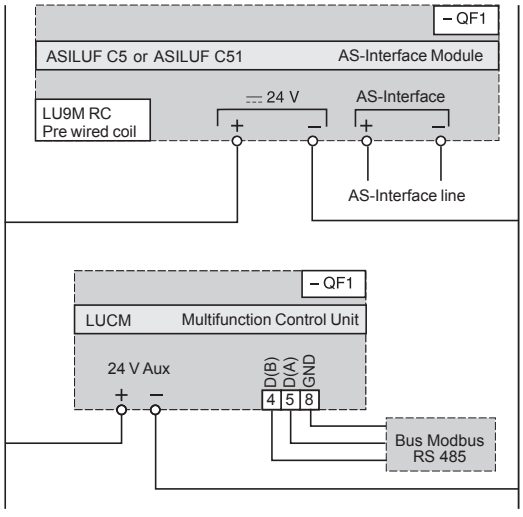

3-wire control, pulsed start with maintaining contact and limit switches

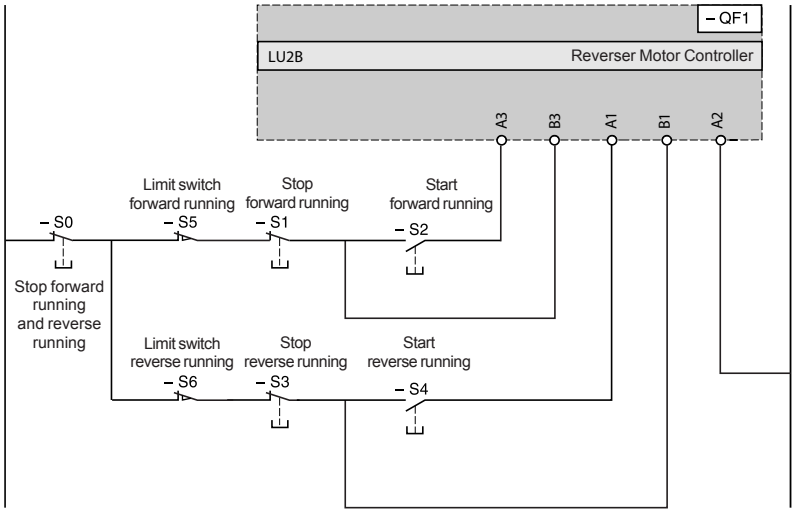

Control by communication modules ASILUF C5 and ASILUF C51

Without pre-wired coil connection
With running direction pilot lights and limit switches

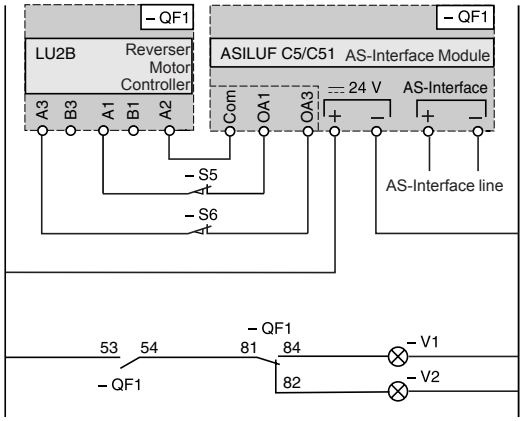

Reversing starter controllers LU2B (continued)

Control via Modbus communication module LUL C031

Without pre-wired coil connection. With local control

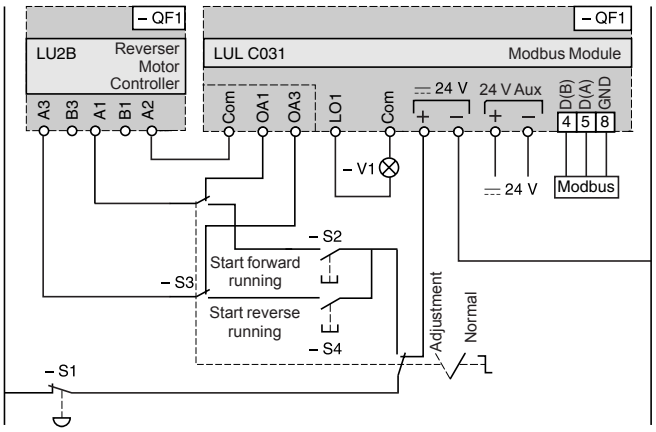

Control via Modbus communication module LUL C033

Without pre-wired coil connection. With local control

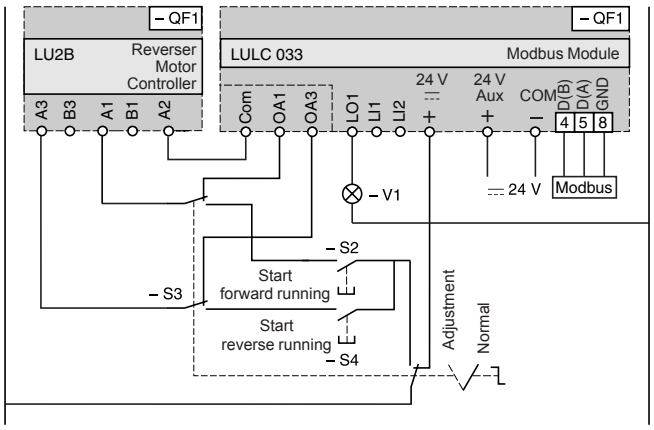

Reversing starter-controllers LUB + LU6M

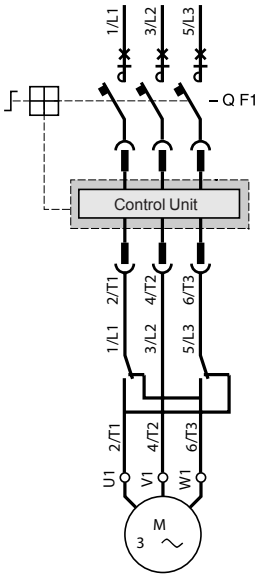

3-wire control, pulsed start with maintaining contact

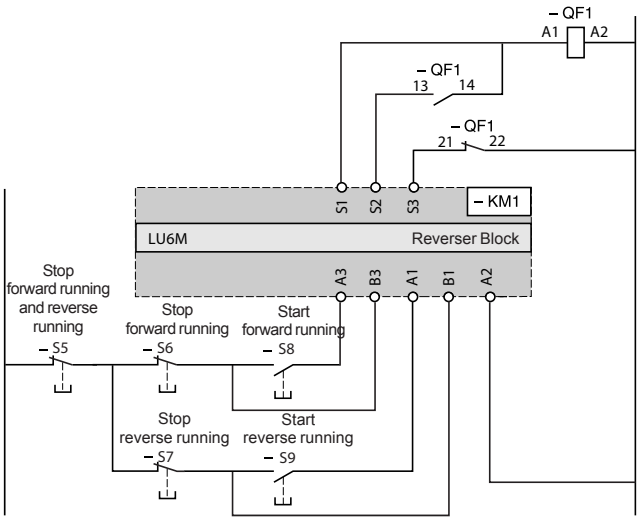

2-wire control via 3-position switch

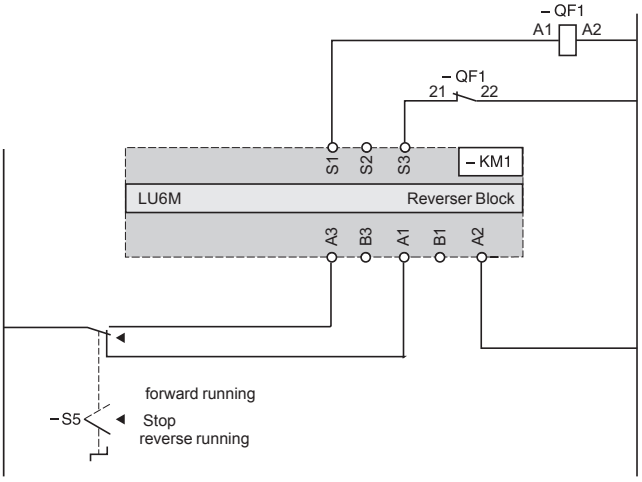

TeSys motor starters - open version
Altistart U01 and TeSys U

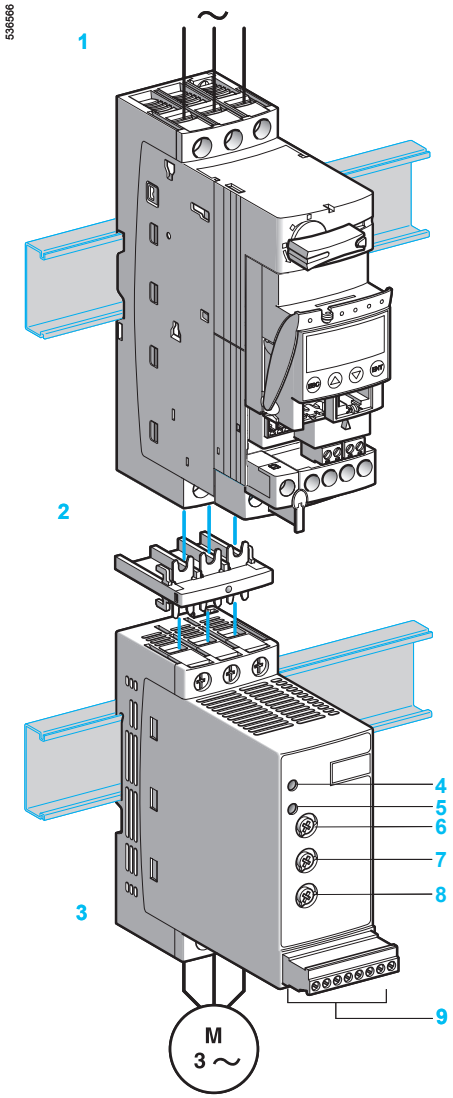

Presentation

The Altistart U01 is a soft start/soft stop unit for asynchronous motors. It is designed primarily for combinations with **TeSys U** controller-starters.

When combined with a **TeSys U** 1 controller by means of a connector 2, the Altistart U01 3 is a power option which provides the "Soft start/soft stop" function. The result is a unique, innovative motor starter.

Using the Altistart U01 starter enhances the starting performance of asynchronous motors by allowing them to start gradually, smoothly and in a controlled manner. It prevents mechanical shocks, which lead to wear and tear, and limits the amount of maintenance work and production downtime.
The Altistart U01 limits the starting torque and current peaks on starting, on machines which do not require a high starting torque.

The Altistart U01 is designed for the following simple applications:
- Conveyors
- Conveyor belts
- Pumps
- Fans
- Compressors
- Automatic doors and gates
- Small cranes
- Belt-driven machines, etc.

The Altistart U01 is compact and easy to install. It complies with standards IEC/EN 60947-4-2, carries UL, CSA, C-Tick, CCC certifications and CE marking.

■ **ATSU 01N2●●LT soft start/soft stop units**
□ Control two phases of the motor power supply to limit the starting current and for deceleration,
□ Internal bypass relay,
□ Motor power ratings ranging from 0.75 kW to 15 kW,
□ Motor supply voltages ranging from 200 V to 480 V, 50/60 Hz.
An external power supply is required for controlling the starter.

Description

■ Altistart U01 soft start/soft stop units are equipped with:
□ A potentiometer for setting the starting time 6,
□ A potentiometer for setting the deceleration time 8,
□ A potentiometer for adjusting the start voltage threshold according to the motor load 7,
□ 1 green LED 4 to indicate that the unit is switched on,
□ 1 yellow LED 5 **to indicate that the motor is powered at nominal voltage, if it is connected to the starter**.
□ A connector 9:
- 2 logic inputs for Run/Stop commands,
- 1 logic input for the BOOST function,
- 1 logic output to indicate the end of starting,
- 1 relay output to indicate the starter has a power supply fault or the motor has reached a standstill at the end of the deceleration stage.

Characteristics: pages 76 and 77 | References: page 78 | Dimensions: page 79 | Schemes: pages 80 to 83

Description of a TeSys U controller-starter

See pages 2 and 3.

ATSU 01N2●●●LT soft start unit functions

■ 2-wire control
The run and stop commands are controlled by a single logic input. State 1 of logic input LI2 controls starting and state 0 controls stopping.

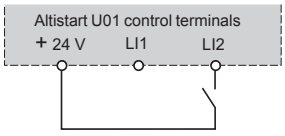

Wiring diagram for 2-wire control

■ 3-wire control
The run and stop commands are controlled by 2 different logic inputs.
Stopping is achieved when logic input LI1 opens (state 0).
The pulse on input LI2 is stored until input LI1 opens.

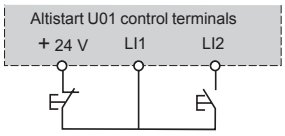

Wiring diagram for 3-wire control

■ Starting time
Controlling the starting time means that the time of the voltage ramp applied to the motor can be adjusted to obtain a gradual starting time, dependent on the motor load.

■ Voltage boost function via logic input
Activating the BOOST logic input enables the function for supplying a starting overtorque capable of overcoming any mechanical friction.
When the input is at state 1, the function is active (input connected to the + 24 V) and the starter applies a fixed voltage to the motor for a limited time before starting.

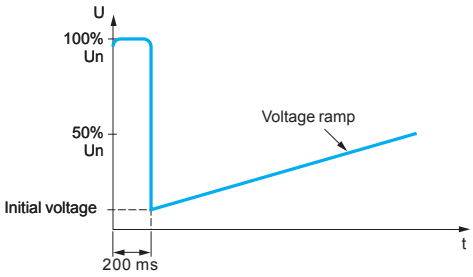

Application of a voltage boost equal to 100% of the nominal motor voltage

■ End of starting
□ Application function for logic output LO1
ATSU 01N2●●LT soft start/soft stop units are equipped with an open collector logic output LO, which indicates the end of starting when the motor has reached nominal speed.

TeSys motor starters - open version
Altistart U01 and TeSys U

Environmental characteristics

Type of starter			ATSU 01N2●●LT
Conformity to standards			Altistart U01 electronic starters have been developed to conform to the strictest international standards and the recommendations relating to electrical industrial control devices (IEC, EN), in particular standard IEC/EN 60947-4-2.
Electromagnetic compatibility EMC			
	Conducted and radiated emissions		CISPR 11 level B, IEC 60947-4-2, level B IEC 61000-4-6 level 3
	Harmonics		IEC 1000-3-2, IEC 1000-3-4
	EMC immunity		EN 50082-2, EN 50082-1
	Electrostatic discharge		IEC 61000-4-2 level 3
	Immunity to radiated radio-electrical interference		IEC 61000-4-3 level 3
	Immunity to electrical transients		IEC 61000-4-4 level 4
	Voltage/current impulse		IEC 61000-4-5 level 3
	Immunity to conducted interference caused by radio-electrical fields		IEC 61000-4-11
	Damped oscillating waves		IEC 61000-4-12 level 3
CE marking			The starters carry CE marking in accordance with the European low voltage directives IEC/EN 60947-4-2.
Product certifications			UL, CSA, C-Tick and CCC
Degree of protection			IP 20
Degree of pollution			2 conforming to IEC/EN 60947-4-2
Vibration resistance			1.5 mm peak to peak from 3 to 13 Hz, 1 gn from 13 to 150 Hz, conforming to IEC/EN 60068-2-6
Shock resistance			15 gn for 11 ms conforming to IEC/EN 60068-2-27
Relative humidity			5…95% without condensation or dripping water conforming to IEC 60068-2-3
Ambient temperature around the unit	Storage	°C	- 25…+ 70 conforming to IEC/EN 60947-4-2
	Operation	°C	- 10…+ 40 without derating, up to 50°C with current derating of 2% per °C above 40°C
Maximum operating altitude		m	1000 without derating (above this, derate the current by 2.2% per additional 100 m)
Operating position Maximum permanent angle in relation to the normal vertical mounting position			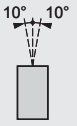

Electrical characteristics

Type of starter			ATSU 01N2●●LT				
Category of use	Conforming to IEC 60947-4-2		Ac-53b				
Rated operating voltage	3-phase ∼ voltage	V	200 - 10% to 480 + 10%				
Frequency		Hz	50 - 5% to 60 + 5%				
Output voltage			Maximum 3-phase voltage equal to line supply voltage				
Control supply voltage			24 V ⎓, 100 mA ± 10%				
Rated operating current		A	6...32				
Adjustable starting time		s	1...10				
Adjustable deceleration time		s	1...10				
Starting torque		%	30.... 80% of DOL motor starting torque				
Type of starter	**ATSU**		**01N206LT**	**01N209LT**	**01N212LT**	**01N222LT**	**01N232LT**
Control power supply consumption			24 V ⎓, 65 mA			24 V ⎓, 100 mA	
Power dissipated	At full load at end of starting	W	1.5	1.5	1.5	2.5	2.5
	In transient state at 5 times the rated operating current	W	61.5	91.5	121.5	222.5	322.5

Type of starter			ATSU 01N206LT to ATSU 01N222LT			ATSU 01N232LT		
Use								
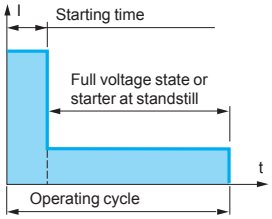	Starting time	s	1	5	10	1	5	10
	Maximum number of cycles per hour		100	20	10	50	10	5

Presentation: pages 74 and 75 | References: page 78 | Dimensions: page 79 | Schemes: pages 80 to 83

Electrical characteristics (continued)

Logic input power supply (electrically isolated between power and control) **+ 24 V, COM**			24 V ± 10% Isolated Max. current 100 mA
Logic inputs **LI1, LI2, BOOST** Stop, run and boost on start-up functions			Logic inputs with impedance 27 kΩ; 24 V power supply (U max 40 V) Max. current 8 mA State 0 if U < 5 V and I < 0.2 mA State 1 if U > 13 V and I > 0.5 mA
Logic output LO1 End of starting signal			Open collector logic output: External 24 V power supply (minimum 6 V, maximum 30 V) Max. current 200 mA
Relay output **R1A R1C**			Normally open (N/O) contact Minimum switching capacity: 10 mA for 6 V ⎓ Maximum switching capacity on inductive load (cos φ = 0.5 and L/R = 20 ms): 2 A for 250 V ∼ or 30 V ⎓ (AC-15) Maximum operating voltage 440 V
LED signalling	Green LED		Starter powered up
	Yellow LED		Nominal voltage reached

Connections (maximum connection capacity and tightening torque)

Power circuit			Connection to Ø 4 mm screw clamps	
Flexible wire without cable end	1 conductor	**mm²**	1.5…10	8 AWG
	2 conductors	**mm²**	1.5…6	10 AWG
Flexible wire with cable end	1 conductor	**mm²**	1…6	10 AWG
	2 conductors	**mm²**	1…6	10 AWG
Rigid wire	1 conductor	**mm²**	1…10	8 AWG
	2 conductors	**mm²**	1…6	10 AWG
Tightening torque		**N.m**	1.9…2.5	
Control circuit			Screw connector	
Flexible wire without cable end	1 conductor	**mm²**	0.5…2.5	14 AWG
	2 conductors	**mm²**	0.5…1.5	16 AWG
Flexible wire with cable end	1 conductor	**mm²**	0.5…1.5	16 AWG
	2 conductors	**mm²**	0.5…1.5	16 AWG
Rigid wire	1 conductor	**mm²**	0.5…2.5	14 AWG
	2 conductors	**mm²**	0.5…1	17 AWG
Tightening torque		**N.m**	0.5	

Torque characteristics (typical curves)

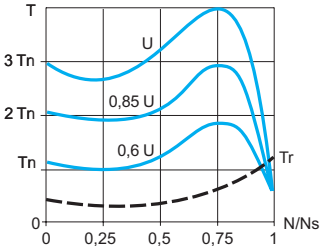

The diagram opposite shows the torque/speed characteristic of a cage motor in relation to the supply voltage.
The torque varies in line with the square of the voltage at a fixed frequency. The gradual increase in the voltage prevents the instantaneous current peak on power-up.

TeSys motor starters - open version
Altistart U01 and TeSys U

DF531714

ATSU 01N222LT

Soft start/soft stop units for 0.75 to 15 kW motors
(can be combined with the TeSys U starter-controller)

Motor				Starter		
Motor power *(1)*				Nominal current	Reference	Weight
230 V	230 V	400 V	460 V			
kW	*HP*	kW	*HP*	A		kg
3-phase supply voltage: 200…480 V 50/60 Hz						
0.75 1.1	*1* *1.5*	1.5 2.2 3	*2* *3*	6	**ATSU 01N206LT**	0.340
1.5 –	*2* –	– 4	*5* –	9	**ATSU 01N209LT**	0.340
2.2 3	*3* –	5.5 –	*7.5* –	12	**ATSU 01N212LT**	0.340
4 5.5	*5* *7.5*	7.5 11	*10* *15*	22	**ATSU 01N222LT**	0.490
7.5	*10*	15	*20*	32	**ATSU 01N232LT**	0.490

Accessorie

Description	Used for starter	Reference	Weight kg
Power connector between ATSU 01N2●●LT and TeSys U	ATSU 01N2●●LT	**VW3 G4104**	0.020

DF510362

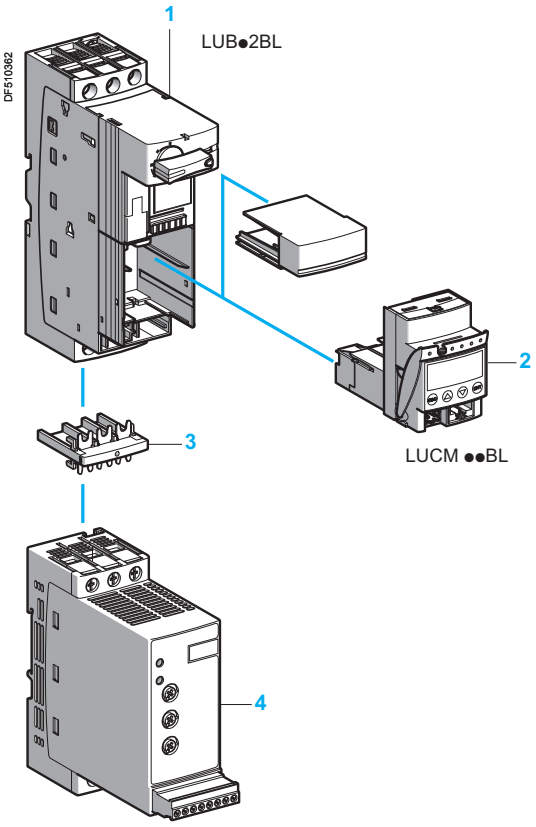

ATSU 01N2●●LT

TeSys U starter and soft start unit combinations

Numerous possibilities for combinations and options are offered.

Motor power			Soft starter	TeSys U	
Voltage				Power base	Control unit *(2)*
230 V kW/*HP*	400 V kW	460 V *HP*			
0.75/*1*	1.5	*2*	ATSU 01N206LT	LUB 12	LUC● 05BL
1.1/*1.5*	2.2/3	*3*	ATSU 01N206LT	LUB 12	LUC● 12BL
1.5/*2*	–	–	ATSU 01N209LT	LUB 12	LUC● 12BL
–	4	*5*	ATSU 01N209LT	LUB 12	LUC● 12BL
2.2/*3*	–	–	ATSU 01N212LT	LUB 12	LUC● 12BL
3/–	5.5	*7.5*	ATSU 01N212LT	LUB 32	LUC● 18BL
4/*5*	7.5	*10*	ATSU 01N222LT	LUB 32	LUC● 18BL
5.5/*7.5*	11	*15*	ATSU 01N222LT	LUB 32	LUC● 32BL
7.5/*10*	15	*20*	ATSU 01N232LT	LUB 32	LUC● 32BL

Example of a starter-motor combination with:
1 non-reversing power base for DOL starting (LUB●2BL)
2 control unit (LUCM ●●BL)
3 power connector (VW3 G4104)
4 Altistart U01soft start/soft stop unit (ATSU 01N2●●LT)

(1) Standard motor power ratings, HP power ratings indicated according to standard UL 508.
(2) Depending on the configuration of the chosen TeSys U starter-controller, replace the ● with A for standard, B for expandable, and M for multifunction.

Presentation: pages 74 and 75
Characteristics: pages 76 and 77
Dimensions: page 79
Schemes: pages 80 to 83

TeSys motor starters - open version
Altistart U01 and TeSys U

TeSys U combination (non-reversing power base) and ATSU 01N206LT to ATSU 01N212LT
Mounting on ⊔ (35 mm) rail with VW3 G4104 connector

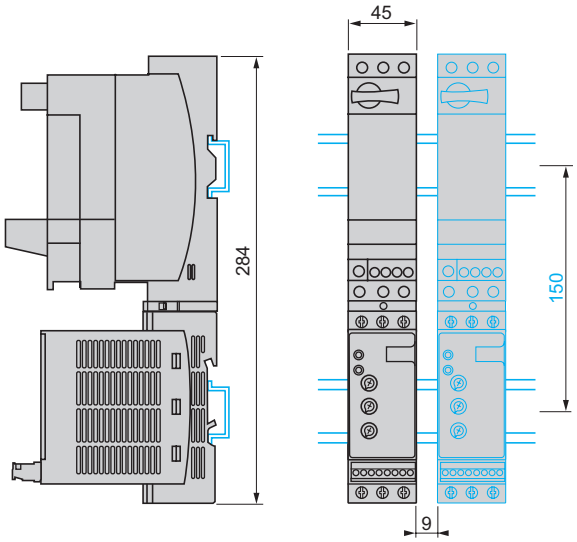

TeSys U combination (non-reversing or reversing power base) and ATSU 01N206LT to ATSU 01N212LT
Side by side mounting

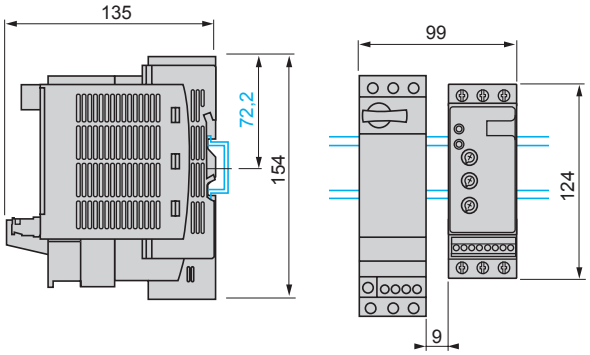

TeSys U combination (non-reversing power base) and ATSU 01N222LT to ATSU 01N232LT
Mounting on ⊔ (35 mm) rail with VW3 G4104 connector

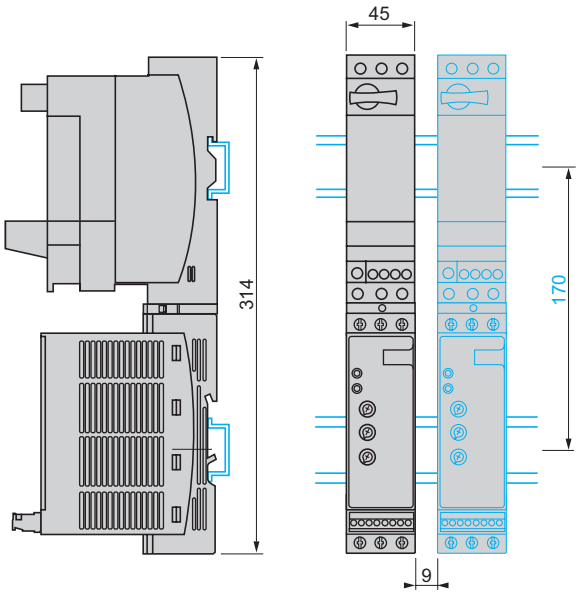

TeSys U combination (non-reversing or reversing power base) and ATSU 01N222LT to ATSU 01N232LT
Side by side mounting

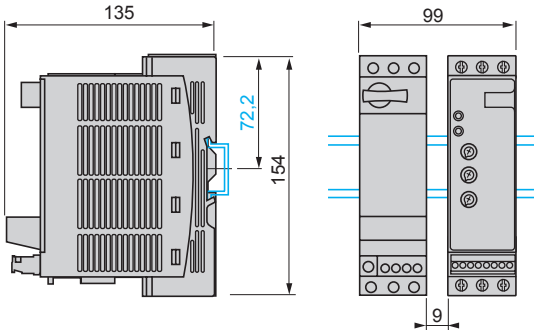

VW3 G4104 connector

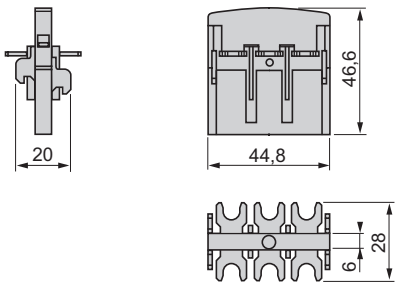

TeSys motor starters - open version
Altistart U01 and TeSys U
For 0.75 to 15 kW motors

ATSU 01N2●●LT soft start/soft stop units

Power wiring

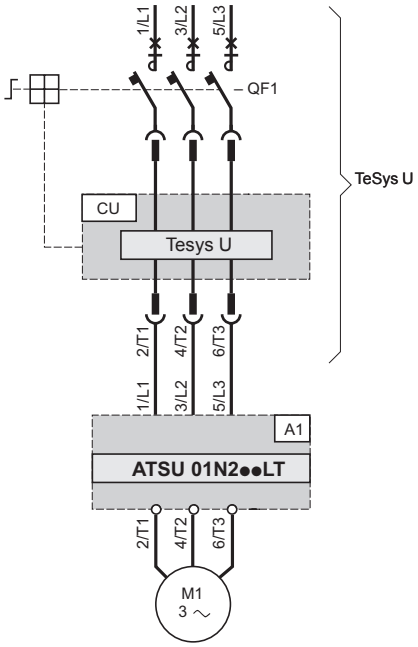

Power wiring with reversing unit

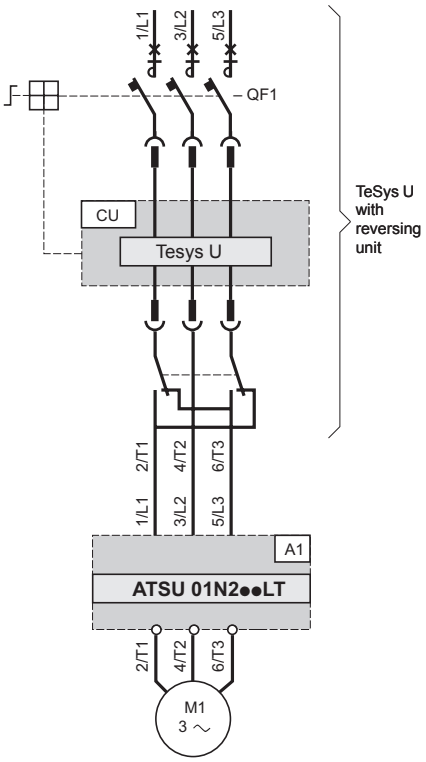

Compatible components (refer to our catalogue: “Motor starter solutions - Control and protection components”)

Code	Description
A1	Soft start/soft stop unit
QF1	TeSys U controller-starter
CU	TeSys U control unit

ATSU 01N2●●LT soft start/soft stop units (continued)

Automatic 2-wire control

Without deceleration

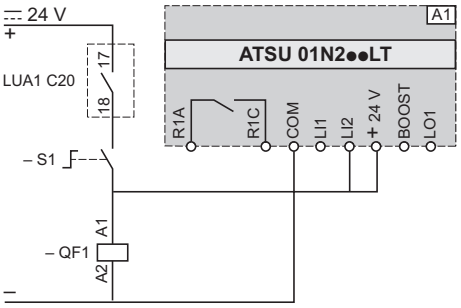

With and without deceleration

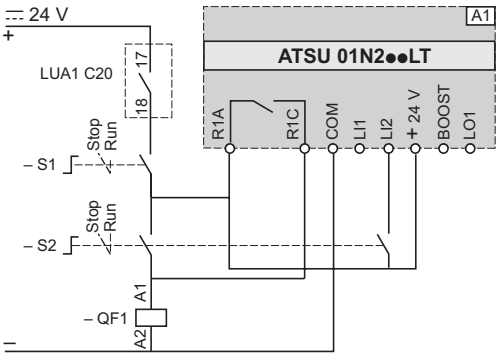

Functional diagrams

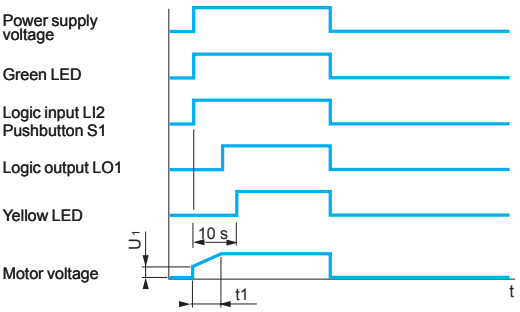

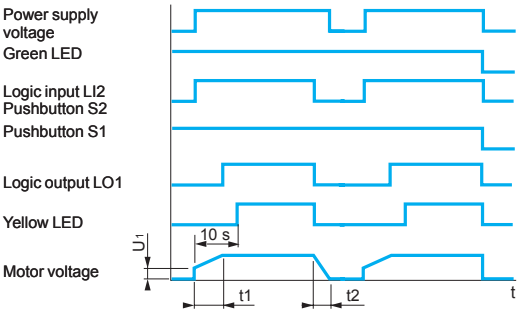

Automatic 3-wire control

Without deceleration

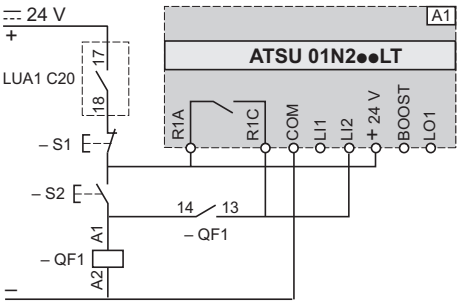

With deceleration

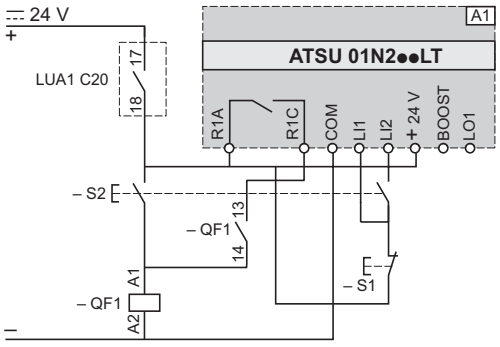

Functional diagrams

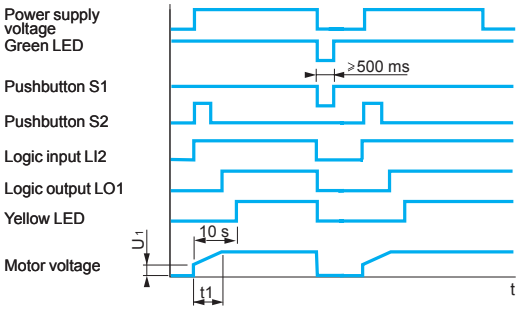

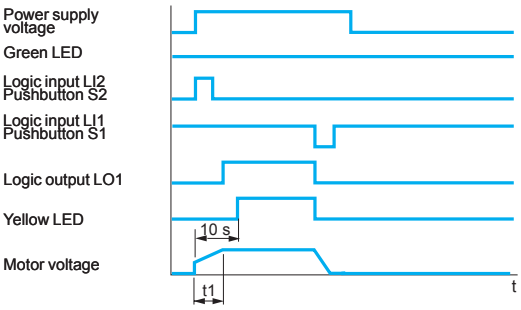

A1: Soft start/soft stop unit
S1, S2: XB4 B or XB5 B pushbuttons
QF1: TeSys U controller-starter
t1: Acceleration time can be controlled by a potentiometer
t2: Deceleration time can be controlled by a potentiometer
U_1: Starting time can be controlled by a potentiometer

Presentation: pages 74 and 75
Characteristics: pages 76 and 77
References: page 78
Dimensions: page 79

ATSU 01N2●●LT soft start/soft stop units (continued)

Automatic 3-wire control, with reversing unit

Without deceleration

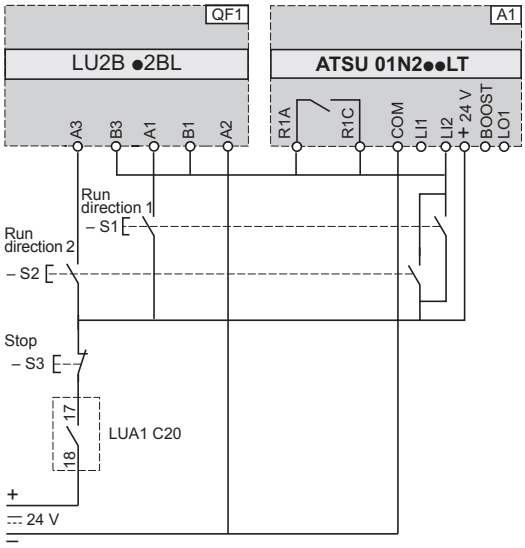

QF1: TeSys U controller-starter with reversing unit
A1: Soft start/soft stop unit
S1, S2, S3: XB4 B or XB5 B pushbuttons
S3: minimum depression time 500 ms

With deceleration

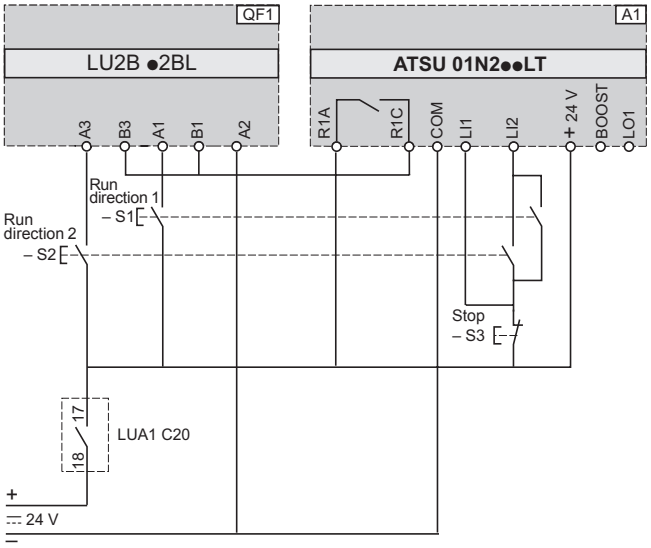

QF1: TeSys U controller-starter with reversing unit
A1: Soft start/soft stop unit
S1, S2, S3: XB4 B or XB5 B pushbuttons

Boost on starting and end of starting signal

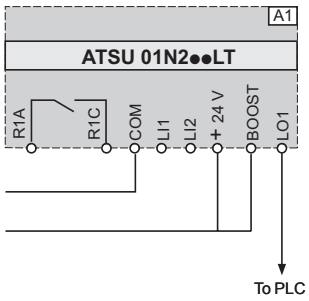

A1: Soft start/soft stop unit

TeSys motor starters - open version
Altistart U01 and TeSys U
For 0.75 to 15 kW motors

ATSU 01N2●●LT soft start/soft stop units (continued)

Automatic control with Modbus communication module, with and without deceleration

Without reversing unit

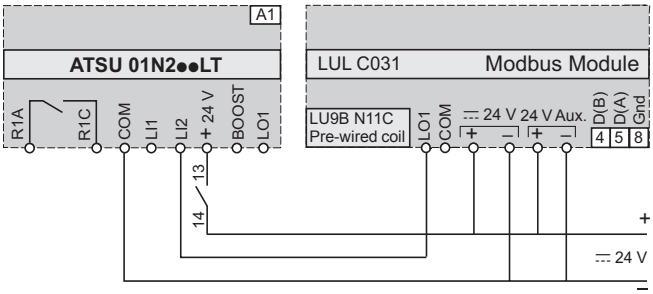

Function	Register	Bit	Value
Powering down TeSys U and ATSU			
–	704	0	0
Automatic control without deceleration			
Run	700	0	1
Stop	704	0	0
Automatic control with deceleration			
Run	700	0	1
Soft stop	700	0	0

A1: Soft start/soft stop unit

With reversing unit

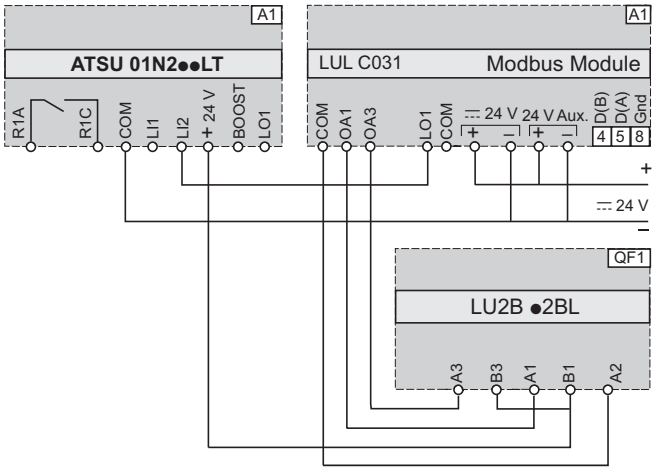

Function	Register	Bit	Value
Powering up TeSys U and ATSU			
Forward	704	0	1
Reverse	704	1	1
Powering down TeSys U and ATSU			
Forward	704	0	0
Reverse	704	1	0
Automatic control without deceleration			
Run	700	0	1
Stop forward	704	0	0
Stop reverse	704	1	0
Automatic control with deceleration (forward or reverse)			
Run	700	0	1
Soft stop	700	0	0

A1: Soft start/soft stop unit
QF1: TeSys U controller-starter with reversing unit

Automatic control with AS-Interface communication module, without deceleration

Without reversing unit

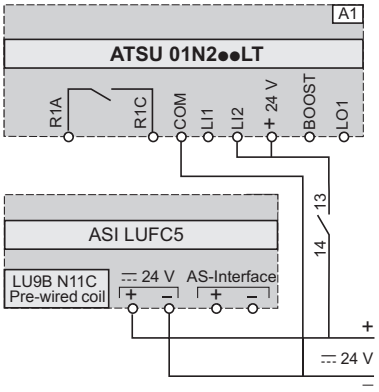

Function	Bit	Value
Power-up and automatic control without deceleration		
Run	D0	1
Stop	D0	0

A1: Soft start/soft stop unit

With reversing unit

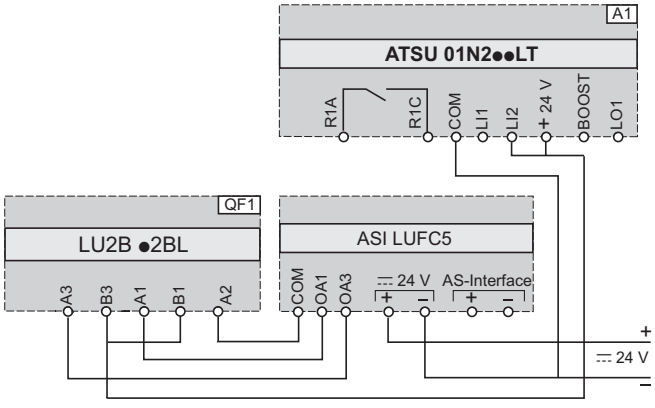

Function	Bit	Value
Power-up and automatic control without deceleration		
Run forward	D0	1
Stop	D0	0
Run reverse	D1	1
Stop	D1	0

A1: Soft start/soft stop unit
QF1: TeSys U starter-controller with reversing unit

Presentation: pages 74 and 75
Characteristics: pages 76 and 77
References: page 78
Dimensions: page 79

TeSys motor starters - open version

Magnetic control unit for the protection of variable speed controllers and soft start units

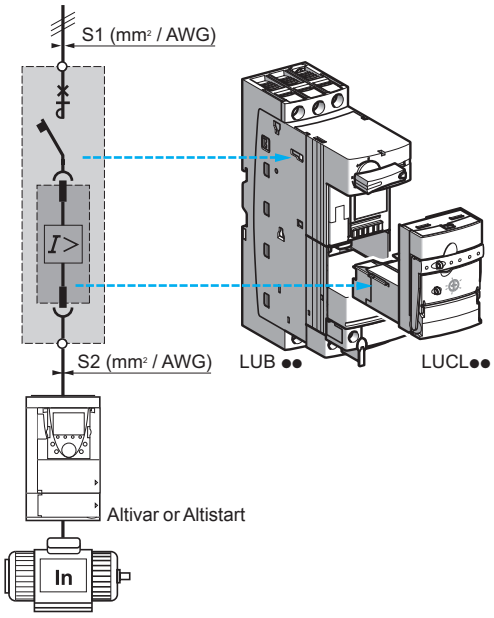

Presentation

When installed upstream of a variable speed controller or soft start unit, control unit LUCL●●, used in conjunction with an LUB 12 or LUB 32 power base, provides:

- isolation,
- short-circuit protection of the motor starter.

(variable speed controller-based or soft start unit-based motor starters).

***Note**: control unit LUCL, when used in conjunction with power base LUB 12 or LUB 32, conforms to standard IEC 60947-2.*

Installation regulations

When the length of the cable between the TeSys U starter and the variable speed controller is more than 1.5 m, the c.s.a. of the cable between the variable speed controller and the TeSys U starter (S2) must be equal to the c.s.a. of the cable upstream of TeSys U (S1).

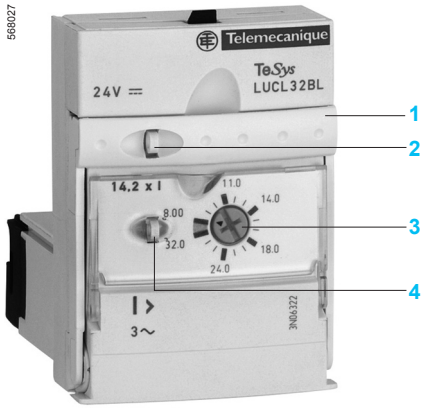

Description

1 Extraction and locking handle
2 Sealing of locking handle
3 Dial for magnetic adjustment of motor In
4 Locking of settings by sealing the transparent cover

References

Description	Line current of the variable speed controller or soft start unit	Reference *(1)*	Weight
	A		kg
Magnetic control unit	0.15…0.6	**LUCL6X●●**	0.135
	0.35…1.4	**LUCL1X●●**	0.135
	1.25…5	**LUCL05●●**	0.135
	3…12	**LUCL12●●**	0.135
	4.5…18	**LUCL18●●**	0.135
	8…32	**LUCL32●●**	0.135

(1) Standard control circuit voltage:

Volts	24	48…72	110…240
⎓	BL *(2), (3)*	–	–
∿	B	–	–
⎓ or ∿	–	ES *(4)*	FU *(5)*

(2) Voltage code to be used for a starter-controller with communication module.
(3) d.c. voltage with maximum ripple of ± 10 %.
(4) ⎓: 48…72 V, ∿: 48 V.
(5) ⎓: 110…220 V, ∿: 110…240 V.

TeSys motor starters - open version

Magnetic control unit for the protection of variable speed controllers and soft start stop units

Control unit and associated power base selection

Functions provided	Maximum motor power ratings 50/60 Hz			Power base reference	Control unit reference	Line current
	< 400/415 V	500 V	690 V			
	KW	KW	KW			A
■ Short-circuit protection ■ Manual reset	0.09	–	–	LUB 12 or LUB 32	LUCL6X●●	0.15…0.6
	0.25	–	–	LUB 12 or LUB 32	LUCL1X●●	0.35…1.4
	1.5	2.2	3	LUB 12 or LUB 32	LUCL05●●	1.25…5
	5.5	5.5	9	LUB 12 or LUB 32	LUCL12●●	3…12
	7.5	9	15	LUB 32	LUCL18●●	4.5…18
	15	15	18.5	LUB 32	LUCL32●●	8…32

Operating characteristics

Control units		Standard	Advanced				Multifunction
		LUCA	LUCB	LUCC	LUCD	LUCL	LUCM
Thermal overload protection		■					■
Over current protection		14.2 x the setting current					3 to 17 x the setting current
Short-circuit protection		14.2 x the max. current					
Protection against phase loss		■					■
Protection against phase imbalance		■					■
Earth fault protection (equipment protection only)		■					■
Tripping class		10		10	20		5…30
Motor type		3-phase		Single-phase	3-phase		Single-phase and 3-phase
Thermal overload test function			■				■
Overtorque							■
No-load running							■
Long starting time							■
Reset method	Manual	■					Parameters can be set
	Automatic or remote		With function module, or parameters can be set via the bus with a communication module (see page 18).				Parameters can be set Parameters can be set via the bus with a communication module (see page 18).

■ Integrated function ■ Function provided with accessory

Compatibility

Compatibility of control unit LUCL●● with		References	Functions
The starter-controller	Yes	LUB 12/LUB 32	Starter-controller (magnetic protection)
The starter	No	LUS 12/LUS 32	Starter without either magnetic or thermal overload protection)
The controller	No	LUT M	Controller (without thermal overload protection)
Add-on contact blocks with fault signalling and auxiliary contacts	Yes	LUA 1C11	Add-on contact blocks with fault signalling (1 N/O + 1 N/C)
		LUA 1C20	Add-on contact blocks with fault signalling (2 N/O)
		LUF N20	Auxiliary contacts (2 N/O)
		LUF N11	Auxiliary contacts (1 N/O + 1 N/C)
		LUF N02	Auxiliary contacts (2 N/C)
Communication modules	Yes	ASILUF C5 and ASILUF C51	AS-Interface communication modules
		LUF C00	Parallel wiring module
		LUL C033	Modbus communication module (1 output/2 inputs)
		LUL C031	Modbus communication module (1 output)
		LUL C15	Advantys STB communication module (1 output/2 inputs)
		LUL C08	CANopen communication module (1 output/2 inputs)
		LUL C09	DeviceNet communication module (1 output/2 inputs)
		LUL C07	Profibus DP communication module (1 output/2 inputs)
Function modules	No	LUF W10	Alarm function module
		LUF DH11	Thermal overload signalling module with manual reset
		LUF DA01	Thermal overload signalling module with automatic or remote reset (1 N/C)
		LUF DA10	Thermal overload signalling module with automatic or remote reset (1 N/O)
		LUF V2	Motor load indication module

TeSys motor starters - open version

TeSys U starter-controllers

Characteristics of magnetic control unit LUCL

Protection	Motor type		3-phase
	Conforming to standard		When used in conjunction with an LUB 12 or LUB 32 power base, magnetic control unit LUCL conforms to standard IEC 60947-2.
Short-circuit protection	Tripping threshold		14.2 x In (max. setting current)
	Tripping tolerance		± 20 %

Environment

Product certifications			CE
Conforming to standards			When used in conjunction an LUB power base, control unit LUCL conforms to standard 60947-2.
Rated insulation voltage (Ui)	Conforming to IEC/EN 60947-1, overvoltage category III, degree of pollution: 3	**V**	690
Rated impulse withstand voltage (Uimp)	Conforming to IEC/EN 60947-2	**kV**	6
Safety separation of circuits SELV	Conforming to IEC/EN 60947-1 appendix N	**V**	Between the control or auxiliary circuit and the main circuit: 400
			Between the control and auxiliary circuits: 40
Degree of protection Conforming to IEC/EN 60947-1 (protection against direct finger contact)	Front panel outside connection zone		IP 40
	Front panel and wired terminals		IP 20
	Other faces		IP 20
Protective treatment	Conforming to IEC/EN 60068		"TH"
	Conforming to/EN 60068-2-30	**Cycles**	12
	Conforming to IEC/EN 60068-2-11	**h**	48
Ambient air temperature around the device	Storage	**°C**	- 40…+ 85
	Operation	**°C**	Power bases and standard and advanced control units: - 25… + 70. (At temperatures above 60°C and up to 70°C, for Ie = 32 A, leave a minimum gap of 9 mm between products).
			Power bases and multifunction control units: - 25…+ 60. (At temperatures above 45 °C, leave a minimum gap of 9 mm between products. At temperatures above 55 °C up to 60 °C, leave a gap of 20 mm between products.)
Maximum operating altitude		**m**	2000
Operating positions	In relation to normal vertical mounting plane		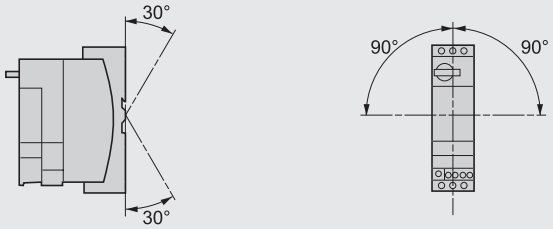
Flame resistance	Conforming to UL 94		V2
	Conforming to IEC/EN 60695-2-12	**°C**	960 (parts supporting live components)
		°C	650
Environmental restrictions			Cadmium and silicone-free, recyclable
Shock resistance 1/2 sine wave = 11 ms	Conforming to IEC/EN60068-2-27 *(1)*		Power poles open: 10 gn
			Power poles closed: 15 gn
Vibration resistance 5…300 Hz	Conforming to IEC/EN 60068-2-6 *(1)*		Power poles open: 2 gn
			Power poles closed: 4 gn *(2)*
Resistance to electrostatic discharge	Conforming to IEC/EN 61000-4-2	**kV**	In open air: 8 - Level 3
		kV	On contact: 8 - Level 4
Immunity to radiated high-frequency disturbance	Conforming to IEC/EN 61000-4-3	**V/m**	10 - Level 3
Immunity to fast transient currents	Conforming to IEC/EN 61000-4-4	**kV**	All circuits except for serial link: 4 - Level 4
		kV	Serial link: 2 - Level 3
Immunity to dissipated shock waves	Conforming to IEC/EN 60947-2		**Common mode** / **Serial mode**
	Uc ∿ 24…240 V, Uc ⎓ 48…220 V	**kV**	2 / 1
	Uc = 24 V ⎓		Not applicable
Immunity to conducted high-frequency disturbance	Conforming to IEC/EN 61000-4-6	**V**	10

(1) Without modifying the contact states, in the most unfavourable direction.
(2) 2 gn with Advantys STB or CANopen communication modules.

TeSys motor starters - open version

TeSys U starter-controllers
Power bases and LUCL magnetic control unit

Power base and control unit type			LUB 12 + LUCL	LUB 32 + LUCL
Power circuit connection characteristics				
Connection to Ø 4 mm screw clamp terminals				
Flexible cable without cable end	1 conductor	**mm²**	2.5…10	2.5…10
	2 conductors	**mm²**	1.5…6	1.5…6
Flexible cable with cable end	1 conductor	**mm²**	1…6	1…6
	2 conductors	**mm²**	1…6	1…6
Flexible cable without cable end	1 conductor	**mm²**	1…10	1…10
	2 conductors	**mm²**	1…6	1…6
Screwdriver			Philips n° 2 or flat screwdriver: Ø 6 mm	
Tightening torque		**N.m**	1.9…2.5	1.9…2.5
Control circuit connection characteristics				
Connection to Ø 3 mm screw clamp terminals				
Flexible cable without cable end	1 conductor	**mm²**	0.75…1.5	0.75…1.5
	2 conductors	**mm²**	0.75…1.5	0.75…1.5
Flexible cable with cable end	1 conductor	**mm²**	0.34…1.5	0.34…1.5
	2 conductors	**mm²**	0.34…1.5	0.34…1.5
Flexible cable without cable end	1 conductor	**mm²**	0.75…1.5	0.75…1.5
	2 conductors	**mm²**	0.75…1.5	0.75…1.5
Screwdriver			Philips n° 2 or flat screwdriver: Ø 5 mm	
Tightening torque		**N.m**	0.8…1.2	0.8…1.2
Control circuit characteristics				
Rated control circuit voltage	∿ 50/60 Hz	**V**	24…240	24…240
	⎓	**V**	24…220	24…220
Voltage limits	⎓ 24 V *(1)*	**V**	20…27	20…27
Operation	∿ 24 V	**V**	20…26.5	20…26.5
	∿ or ⎓ 48…72 V	**V**	∿ 38.5…72. ⎓ 38.5…93	∿ 38.5…72. ⎓ 38.5…93
	∿ 110…240 V	**V**	∿ 88…264	∿ 88…264
	⎓ 110…240 V	**V**	⎓ 88…242	⎓ 88…242
Drop-out	⎓ 24 V	**V**	14.5	14.5
	∿ 24 V	**V**	14.5	14.5
	∿ or ⎓ 48…72 V	**V**	29	29
	∿ 110…240 V, ⎓ 110…220 V	**V**	55	55
Typical consumption	⎓ 24 V	**mA**	130	220
I max while closing	∿ 24 V	**mA**	140	220
	∿ or ⎓ 48…72 V	**mA**	280	280
	∿ 110…240 V, ⎓ 110…220 V	**mA**	280	280
I rms sealed	⎓ 24 V	**mA**	60	80
	∿ 24 V	**mA**	70	90
	∿ or ⎓ 48…72 V	**mA**	35	45
	∿ 110…240 V, ⎓ 110…220 V	**mA**	35	25
Heat dissipation		**W**	2	3
Operating time	Closing	**ms**	24 V: 70; 48 V: 60; ≥ 72 V: 50	24 V: 70; 48 V: 60; ≥ 72 V: 50
	Opening	**ms**	35	35
Resistance to micro-breaks		**ms**	3	3
Resistance to voltage dips	IEC/EN 61000-4-11		At least 70 % of Uc for 500 ms	
Mechanical durability	In millions of operating cycles		15	15
Maximum operating rate	In operating cycles per hour		3600	3600
Main pole characteristics				
Number of poles			3	3
Isolation conforming to IEC/EN 60947-1	Possible		Yes	Yes
	Padlocking		1 padlock with Ø 6.9 mm shank	1 padlock with Ø 6.9 mm shank
Rated thermal current		**A**	12	32
Rated operational current (Ue ≤ 440 V)	Conforming to IEC/ EN 60947-2 Category AC-41		θ ≤ 70 °C: 12 A	θ ≤ 70 °C: 32 A
	Conforming to IEC/ EN 60947-2 Category AC-43		θ ≤ 70 °C: 12 A	θ ≤ 70 °C: 32 A
Rated operational voltage		**V**	690 *(3)*	690 *(3)*
Frequency limits	Of the operating current	**Hz**	40…60	40…60
Power dissipated in the power circuits	Operational current	**A**	3 6 9 12 18 25 32	
	Power dissipated in all three poles	**W**	0.1 0.3 0.6 1.1 2.4 4.6 7.5	
Rated breaking capacity on short-circuit		**V**	230 440 500 600	
		kA	50 50 10 4	
Total breaking time		**ms**	2 2 2	
Thermal limit	With Isc max on 440 V	**kA²s**	90	120

(1) d.c. voltage with maximum ripple of ± 10 %.
(2) No consumption sealed.
(3) For 690 V, use phase barrier LU9SP0.

TeSys motor starters - open version
TeSys U starter-controllers

107983 + 106761

107983 + 106479

107983 + 106476

Coordination

The standard defines tests at different levels of current; the purpose of these tests is to place the equipment in extreme conditions.
The standard defines 2 types of coordination, according to the condition of the components after testing: type 1 and type 2
Type 1 coordination requires that in a short-circuit condition, the contactor or starter must not present any danger to personnel or installations and must not be able to resume operation without repair or the replacement of parts.

The product combinations given below provide type 1 coordination

Soft start-soft stop unit/TeSysU starter controller combination with magnetic protection

TeSys U / Altistart 48: type 1 coordination

Power 400 V (kW)	TeSys U references (protection + power switching)	Soft start unit reference	
		Class 10	Class 20
5.5	LUB32 + LUCL32 or LUCL18	–	ATS48D17
7.5	LUB32 + LUCL32	ATS48D17	ATS48D22
11	LUB32 + LUCL32	ATS48D22	ATS48D32
15	LUB32 + LUCL32	ATS48D32	ATS48D38

Variable speed controller/TeSysU starter controller combination with magnetic protection

TeSys U / Altivar 21 UL Type 1/IP 20: type 1 coordination

Power 400 V (kW)	TeSys U references (protection + power switching)	Variable speed controller reference
0.75	LUB12 + LUCL05	ATV21H075N4
		ATV21HU15N4
2.2	LUB12 + LUCL12	ATV21HU22N4
3	LUB12 + LUCL12	ATV21HU30N4
4	LUB12 + LUCL12	ATV21HU40N4
5.5	LUB32 + LUCL32 or LUCL18	ATV21HU55N4
7.5	LUB32 + LUCL32 or LUCL18	ATV21HU75N4
11	LUB32 + LUCL32	ATV21HD11N4
15	LUB32 + LUCL32	ATV21HD15N4

TeSys U / Altivar 21 IP 54: type 1 coordination

Power 400 V (kW)	TeSys U references (protection + power switching)	Variable speed controller reference
0.75	LUB12 + LUCL05	ATV21W075N4/N4C
1.5	LUB12 + LUCL12 or LUCL05	ATV21WU15N4/N4C
2.2	LUB12 + LUCL12	ATV21WU22N4/N4C
3	LUB12 + LUCL12	ATV21WU30N4/N4C
4	LUB12 + LUCL12	ATV21WU40N4/N4C
5.5	LUB32 + LUCL32 or LUCL18	ATV21WU55N4/N4C
7.5	LUB32 + LUCL32 or LUCL18	ATV21WU75N4/N4C
11	LUB32 + LUCL32	ATV21WD11N4/N4C
15	LUB32 + LUCL32	ATV21WD15N4/N4C

TeSys motor starters - open version
TeSys U starter-controllers

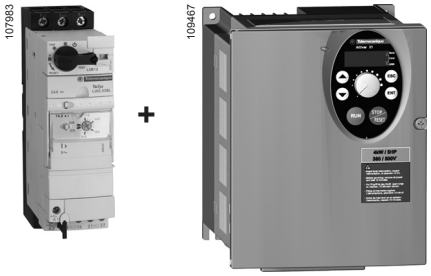

Variable speed controller/TeSysU starter controller combination with magnetic protection (continued)

TeSys U / Altistart 31: type 1 coordination

Power 400 V (kW)	TeSys U references (protection + power switching)	Variable speed controller reference
0.37	LUB12 + LUCL05	**ATV31H037N4**
0.55	LUB12 + LUCL05	**ATV31H055N4**
0.75	LUB12 + LUCL05	**ATV31H075N4**
1.1	LUB12 + LUCL12	**ATV31HU11N4**
1.5	LUB12 + LUCL12	**ATV31HU15N4**
2.2	LUB12 + LUCL12	**ATV31HU22N4**
3	LUB32 + LUCL18	**ATV31HU30N4**
4	LUB32 + LUCL18	**ATV31HU40N4**
5.5	LUB32 + LUCL32	**ATV31HU55N4**
7.5	LUB32 + LUCL32	**ATV31HU75N4**

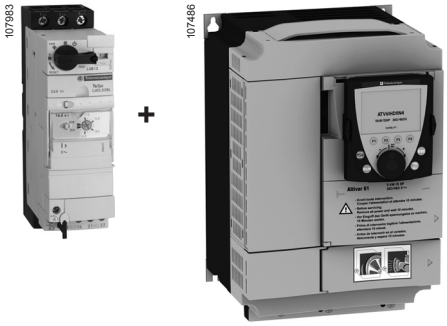

TeSys U / Altistart 61: type 1 coordination

Power 400V (kW)	TeSys U references (protection + power switching)	Variable speed controller reference
0.75	LUB12 + LUCL05	**ATV61H075N4**
1.5	LUB12 + LUCL12	**ATV61HU15N4**
2.2	LUB12 + LUCL12	**ATV61HU22N4**
3	LUB32 + LUCL18	**ATV61HU30N4**
4	LUB32 + LUCL18	**ATV61HU40N4**
5.5	LUB32 + LUCL32	**ATV61HU55N4**
7.5	LUB32 + LUCL32	**ATV61HU75N4**

TeSys U / Altistart 71: type 1 coordination

Power 400V (kW)	TeSys U references (protection + power switching)	Variable speed controller reference
0.75	LUB12 + LUCL05	**ATV71H075N4**
1.5	LUB12 + LUCL12	**ATV71HU15N4**
2.2	LUB12 + LUCL12	**ATV71HU22N4**
3	LUB32 + LUCL18	**ATV71HU30N4**
4	LUB32 + LUCL18	**ATV71HU40N4**
5.5	LUB32 + LUCL32	**ATV71HU55N4**

TeSys motor starters - open version
TeSys U controllers

107226

Presentation

Above 32 A, the TeSys U controller provides a motor starter management solution identical to that provided by TeSys U starter-controllers.

Used in conjunction with a short-circuit protection device and a contactor, it provides a motor starter whose functions are the same as those of a TeSys U starter-controller and, in particular, provides the following functions: overload protection, motor starter control and application monitoring.

It consists of a control unit whose adjustment range is compatible with the secondary of current transformers, plus a control base which also allows fitment of a function module or a communication module.

It requires a ⎓ 24 V external power supply.

The secondaries of current transformers, the ⎓ 24 V power supply, the 10 inputs and the 5 outputs are connected by screw terminal block.

520973

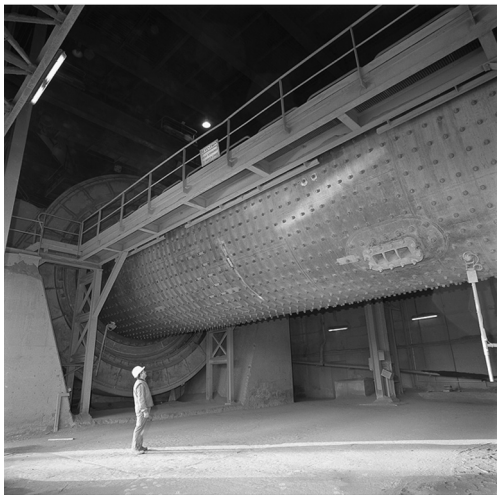

Application example

Detecting blockage of a rock crusher by monitoring the motor current.

Operating conditions

- Power: 90 kW at 400 V.
- In: 185 A.
- Duty class S1.
- Control circuit voltage: ∿ 230 V
- Control-command by PLC and serial link using the Modbus protocol.

Products used

Description	Item	Quantity	Reference	Page
Controller	1	1	**LUT M20BL**	94
Multifunction control unit	2	1	**LUCM T1BL**	94
Modbus communication module	3	1	**LUL C033**	43
Current transformer	4	3	**LUT C4001**	94
Contactor	5	1	**LC1 F185P7**	–
Circuit-breaker	6	1	**NS 250HMA**	–

523762

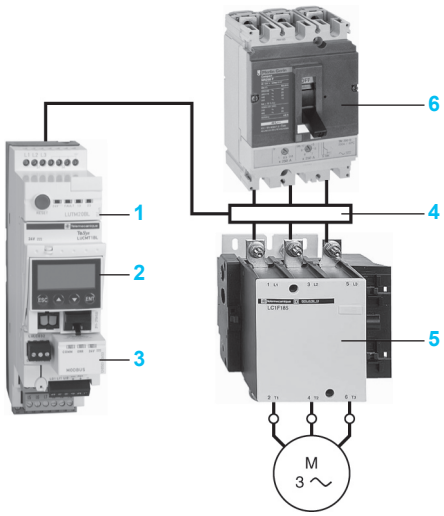

Functions performed

- Short-circuit protection with level of protection of 70 kA at 400V.
- Electronic protection against thermal overloads with an adjustment range of 4.
- Detection of crusher blockage by monitoring the induced overcurrent. To use the "overtorque or jam" function, the following parameters must be entered:
  - □ trip: the answer yes/no enables or disables the function,
  - □ time before tripping: the time period during which the value of the current must be above the tripping threshold in order to cause tripping (adjustable from 1 to 30 s).
  - □ tripping threshold: value as a % of the load current ratio in relation to the setting current. If the ratio remains above this threshold for the time specified in the previous parameter, the product trips (adjustable from 100 to 800 %).

It is possible to set the parameter for an alarm at a preset threshold under the same conditions as above.

Characteristics : pages 92 and 93 | References : page 94 | Dimensions, mounting : page 96 | Schemes : page 97

Application example (continued)

Scheme

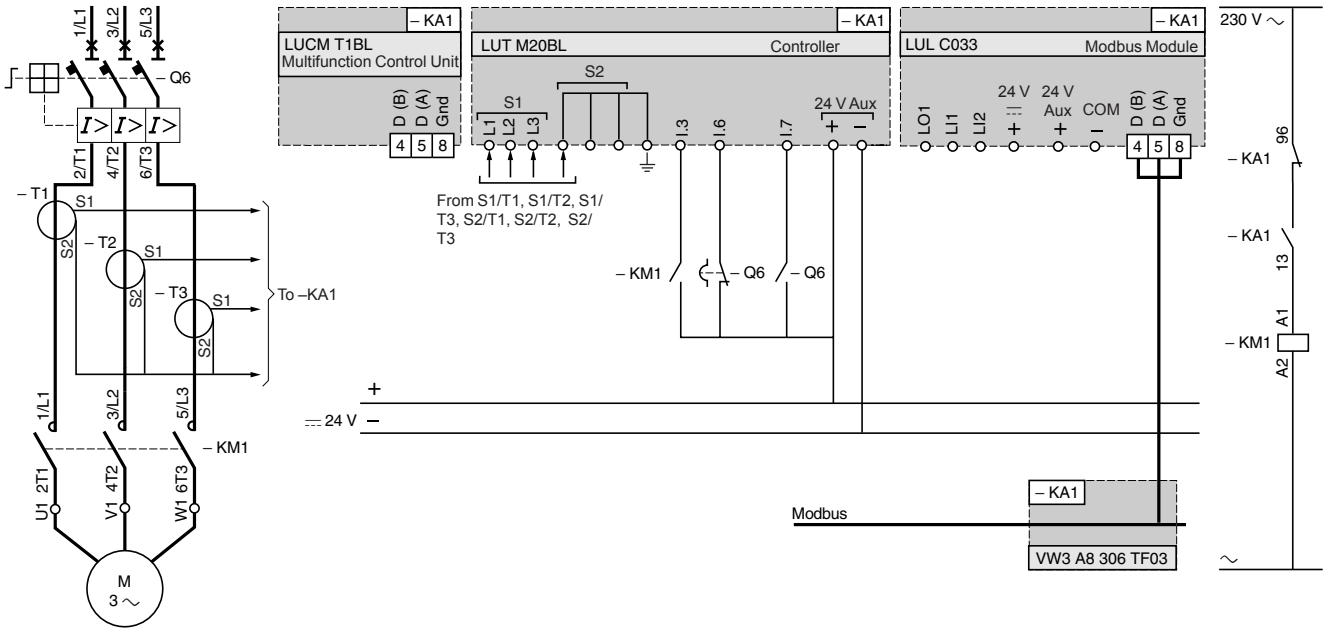

Other functions

The multifunction control unit incorporates other control and protection functions, such as: monitoring and control of phase current, alarm, …
Communication module LUL C033 also provides a programmable output and two programmable inputs.

TeSys motor starters - open version
TeSys U controllers

Environment

Control base and control unit type			LUT M + LUCB T1BL or LUCD T1BL without LUL C	LUT M + LUCM T1BL or LUL C
Product certifications			UL, CSA, ASEFA	
Conforming to standards			IEC/EN 60947-4-1, UL 508, CSA C22-2 N°14	
Rated insulation voltage of the outputs (Ui)	Conforming to IEC/EN 60947-1, overvoltage category III, degree of pollution: 3	**V**	250	
	Conforming to UL508, CSA C22-2 n°14	**V**	250	
Rated impulse withstand voltage of the outputs (Uimp)	Conforming to IEC/EN 60947-4-1	**kV**	4	
Degree of protection Conforming to IEC/EN 60947-1 (protection against direct finger contact)	Front panel (outside connection zone)		IP 40	
	Front panel and wired terminals		IP 20	
	Other faces		IP 20	
Protective treatment	Conforming to IEC/EN 60068		"TH"	
	Conforming to IEC/EN 60068-2-30	**Cycles**	12	
	Conforming to IEC/EN 60068-2-11	**h**	48	
Ambient air temperature around the device	Storage	**°C**	- 40…+ 85	
	Operation	**°C**	- 25…+ 70	- 25…+ 60
Maximum operating altitude		**m**	2000	
Operating positions Without derating	In relation to normal vertical mounting plane		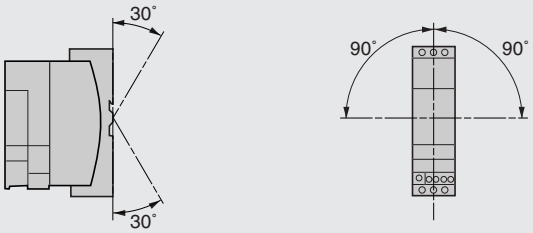	
Flame resistance	Conforming to UL 94		V2	
	Conforming to IEC/EN 60695-2-12	**°C**	960 (parts supporting live components)	
		°C	650	
Shock resistance 1/2 sine wave = 11 ms	Conforming to IEC/EN60068-2-27 *(1)*		15 gn	
Vibration resistance 5…300 Hz	Conforming to IEC/EN 60068-2-6 *(1)*		4 gn	
Resistance to electrostatic discharge	Conforming to IEC/EN 61000-4-2	**kV**	In open air: 8 - Level 3	
		kV	On contact: 6 - Level 3	
Resistance to radiated fields	Conforming to IEC/EN 61000-4-3	**V/m**	10 - Level 3	
Immunity to fast transient currents	Conforming to IEC/EN 61000-4-4	**kV**	CT outputs and inputs: 4 - Level 4	
		kV	Inputs and supply: 2 - Level 3	
Immunity to radioelectric fields	Conforming to IEC/EN 61000-4-6	**V**	10	

Control base and control unit relays

Immunity to dissipated shock waves	Conforming to IEC/EN 60947-4-1		**Common mode**	**Serial mode**
	Output relays / power line	**kV**	4	2
	Inputs	**kV**	2	1
	Serial communication	**kV**	2	–

(1) Without modifying the contact states, in the most unfavourable direction.

Control circuit supply characteristics

Operational voltage		**V**	⎓ 20.4…28.8
Power consumption		**W**	2 max
Associated protection		**A**	gG fuse. 0.5
Cabling			
Connectors	Pitch	**mm**	5
Flexible cable without cable end	1 conductor	**mm²**	0.2…2.5
	2 identical conductors	**mm²**	0.2…1.5
Flexible cable with cable end			
Without insulated ferrule	1 conductor	**mm²**	0.25…2.5
	2 identical conductors	**mm²**	0.25…1
With insulated ferrule	1 conductor	**mm²**	0.25…2.5
	2 identical conductors *(1)*	**mm²**	0.5…1.5
Solid cable without cable end	1 conductor	**mm²**	0.2…2.5
	2 identical conductors	**mm²**	0.2…1
Conductor size	1 conductor		AWG 24 to AWG 12
Tightening torque		**N.m**	0.5…0.6
Flat screwdriver		**mm**	3

Input characteristics

Operational voltage		**V**	⎓ 24
Logic inputs			Logic state 1: I ⩾ 6 mA - 16 V Logic state 0: I ⩽ 1.5 mA - 5 V

Discrete output characteristics

Base controller type			**LUT M10BL**	**LUT M20BL**
Type			Single break volt-free contacts	
Load	a.c. supply		C 300	B 300
	d.c. supply		24 V/5 A	24 V/5 A
Permissible power in cat. AC-15	For 500 000 operating cycles	**VA**	180	500
Permissible power in cat. DC-13	For 500 000 operating cycles	**W**	30	30
Associated protection		**A**	gG fuse, 4	gG fuse, 4
Used with contactor type *(2)*			Control voltage ⎓ 24 V: LP1K, LC1 D09…D95. Control voltage ∿ 24…240 V: LC1K, LC1D.	Control voltage ∿ 100…240 V: LC1K, LC1D, LC1 F185…F500

Characteristics of external current transformers LUT C●●●1

Precision		Class 5P					
Precision limit factor		10					
Maximum operating temperature	**°C**	70					
Transformer ratio		30/1	50/1	100/1	200/1	400/1	800/1
Diameter of conductor passage hole	**mm**	28	22	35	32	–	–
Maximum wire c.s.a.	**mm²**	30 x 10	30 x 10	40 x 10	65 x 32	38 x 127	53 x 127

(1) Use a double cable end.
(2) For other combinations, use an intermediate relay between the output of controller LUTM and the contactor coil.

TeSys motor starters - open version
TeSys U controllers

532083

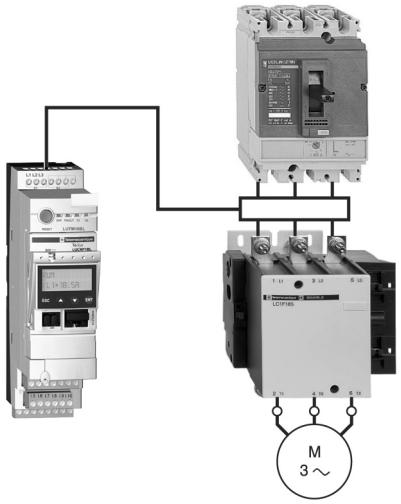

LUT M + LUCM T1BL + LUTC ●●

References

Control bases (auxiliary supply voltage ⎓ 24 V)

Connection		For use with contactor	Reference	Weight
Current transformers	Control			kg
Screws	Screws	LC1 D●●	**LUT M10BL**	0.800
		LC1 F●●●	**LUT M20BL**	0.800

Control units

Description	Class	For motor type	Setting range	Reference	Weight kg
Advanced	10	3-phase	0.35…1.05	**LUCB T1BL**	0.140
	20	3-phase	0.35…1.05	**LUCD T1BL**	0.140
Multifunction	5 to 30	3-phase	0.35…1.05	**LUCM T1BL**	0.175

Current transformers

Operating current		Reference	Weight
Primary	Secondary		kg
30	**1**	**LUT C0301**	0.550
50	**1**	**LUT C0501**	0.330
100	**1**	**LUT C1001**	0.450
200	**1**	**LUT C2001**	0.590
400	**1**	**LUT C4001**	0.870
800	**1**	**LUT C8001**	1.210

Function modules and communication modules

The TeSys U controller is compatible with the modules listed below:
- ■ Thermal overload alarm module LUF W10,
- ■ Motor load indication module LUF V2,
- ■ Communication modules:
- □ Modbus (LUL C033),
- □ CANopen (LULC08),
- □ DeviceNet (LULC09),
- □ Advantys STB (LUL C15).

Note : *Communication modules* ***LUL C07*** *(Profibus DP),* ***ASILUF C5*** *and* ***ASILUF C51*** *(AS-Interface) are not compatible with the TeSys U controller.*
Module ***LUF W10*** *is only compatible with control units* ***LUCB T1BL*** *and* ***LUCD T1BL****.*

Presentation : page 90
Characteristics : pages 92 and 93
Dimensions, mounting : page 96
Schemes : page 97

TeSys motor starters - open version
TeSys U controllers

Combinations providing type 2 coordination

With circuit-breaker

Standard power ratings of 3-phase motors 50-60 Hz in category AC-3 400/415 V		Circuit-breaker			Contactor	TeSys U controller	Current transformers
PkW	IeA	Reference	Rating A	Irm *(1)* A	Reference *(2)*	Reference	Reference
18.5	35	**GV3 L40**	40	560	**LC1 D50A**	**LUTM + LUC●**	**3 x LUT C0501**
22	41	**GV3 L50**	50	700	**LC1 D50A**	**LUTM + LUC●**	**3 x LUT C1001**
30	55	**GV3 L65**	65	910	**LC1 D65A**	**LUTM + LUC●**	**3 x LUT C1001**
37	66	**NS80HMA**	80	1040	**LC1 D80**	**LUTM + LUC●**	**3 x LUT C1001**
45	80	**NS100HMA**	100	1300	**LC1 D95**	**LUTM + LUC●**	**3 x LUT C1001**
55	97	**NS160HMA**	150	1350	**LC1 D115**	**LUTM + LUC●**	**3 x LUT C2001**
75	132	**NS160HMA**	150	1800	**LC1 D150**	**LUTM + LUC●**	**3 x LUT C2001**
90	160	**NS250HMA**	220	2200	**LC1 F185**	**LUTM + LUC●**	**3 x LUT C2001**
110	195	**NS250HMA**	220	2640	**LC1 F225**	**LUTM + LUC●**	**3 x LUT C4001**
132	230	**NS400HMA**	320	3200	**LC1 F265**	**LUTM + LUC●**	**3 x LUT C4001**
160	280	**NS400HMA**	320	4160	**LC1 F330**	**LUTM + LUC●**	**3 x LUT C4001**
200	350	**NS630HMA**	500	5000	**LC1 F400**	**LUTM + LUC●**	**3 x LUT C4001**
220	385	**NS630HMA**	500	5500	**LC1 F400**	**LUTM + LUC●**	**3 x LUT C4001**
250	430	**NS630HMA**	500	6000	**LC1 F500**	**LUTM + LUC●**	**3 x LUT C8001**

With fuses

Standard power ratings of 3-phase motors 50-60 Hz in category AC-3 400/415 V		Circuit-breaker	aM fuses		Contactor	TeSys U controller	Current transformers
PkW	IeA	Reference	Size	Rating A	Reference *(2)*	Reference	Reference
18.5	35	**GS● F**	14 x 51	40	**LC1 D40A**	**LUTM + LUC●**	**3 x LUT C0501**
22	41	**GS● J**	22 x 58	50	**LC1 D50A**	**LUTM + LUC●**	**3 x LUT C1001**
30	55	**GS● J**	22 x 58	80	**LC1 D80**	**LUTM + LUC●**	**3 x LUT C1001**
37	66	**GS● J**	22 x 58	100	**LC1 D80**	**LUTM + LUC●**	**3 x LUT C1001**
45	80	**GS● J**	22 x 58	100	**LC1 D95**	**LUTM + LUC●**	**3 x LUT C1001**
55	97	**GS● L**	T0	125	**LC1 D115**	**LUTM + LUC●**	**3 x LUT C2001**
75	132	**GS● L**	T0	160	**LC1 D150**	**LUTM + LUC●**	**3 x LUT C2001**
90	160	**GS● N**	T1	200	**LC1 F185**	**LUTM + LUC●**	**3 x LUT C2001**
110	195	**GS● N**	T1	250	**LC1 F225**	**LUTM + LUC●**	**3 x LUT C4001**
132	230	**GS● QQ**	T2	315	**LC1 F265**	**LUTM + LUC●**	**3 x LUT C4001**
160	280	**GS● QQ**	T2	400	**LC1 F330**	**LUTM + LUC●**	**3 x LUT C4001**
200	350	**GS2 S**	T3	500	**LC1 F400**	**LUTM + LUC●**	**3 x LUT C4001**
220	385	**GS2 S**	T3	500	**LC1 F400**	**LUTM + LUC●**	**3 x LUT C4001**
250	430	**GS2 S**	T3	500	**LC1 F500**	**LUTM + LUC●**	**3 x LUT C8001**
315	540	**GS2 S**	T3	630	**LC1 F630**	**LUTM + LUC●**	**3 x LUT C8001**

(1) Irm: setting current of the magnetic trip.
(2) For reversing operation, replace the prefix LC1 with LC2.

Dimensions, mounting

Controllers

LUTM ●0BL

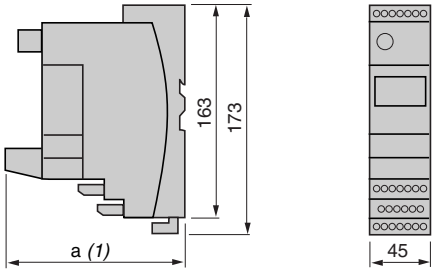

	a
With Modbus module	135
With Advantys STB, CANopen or DeviceNet modules	147

(1) Depth with communication module

Rail mounting

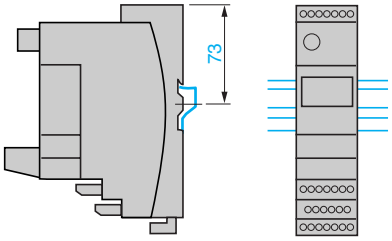

Rail mounting

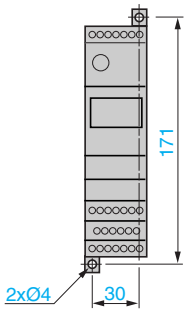

Current transformers

LUTC 0301…1001

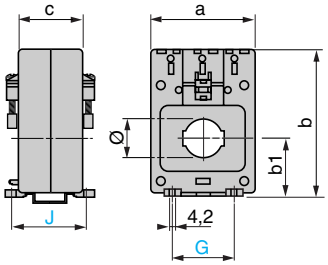

LUTC	a	b	b1	c	Ø	G	J
0301	78	108	42	46	28	45	54
0501	57	86	31	42	23	45	50
1001	78	108	42	46	35	45	54

LUTC 2001…8001

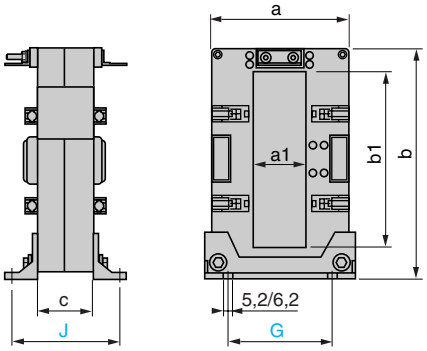

LUTC	a	a1	b	b1	c	G	J
2001	94	32	99	55	40	68	52
4001	99	38	170	127	40	75	64
8001	125	54	170	127	40	95	67

Schemes

Reversing controller LUT M

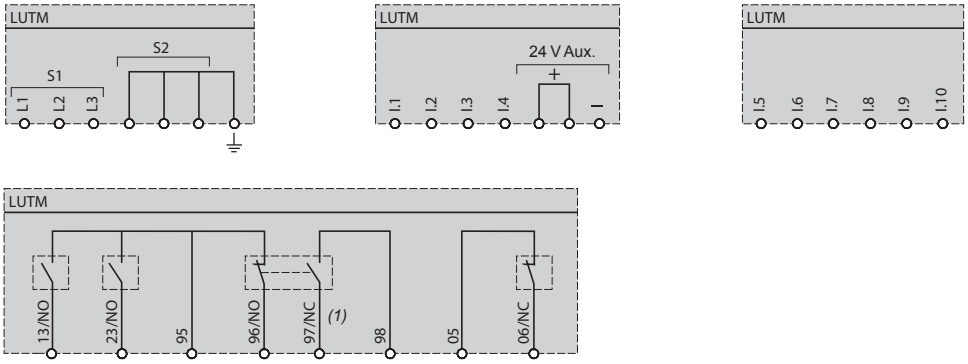

3-wire control, pulsed start with maintaining contact

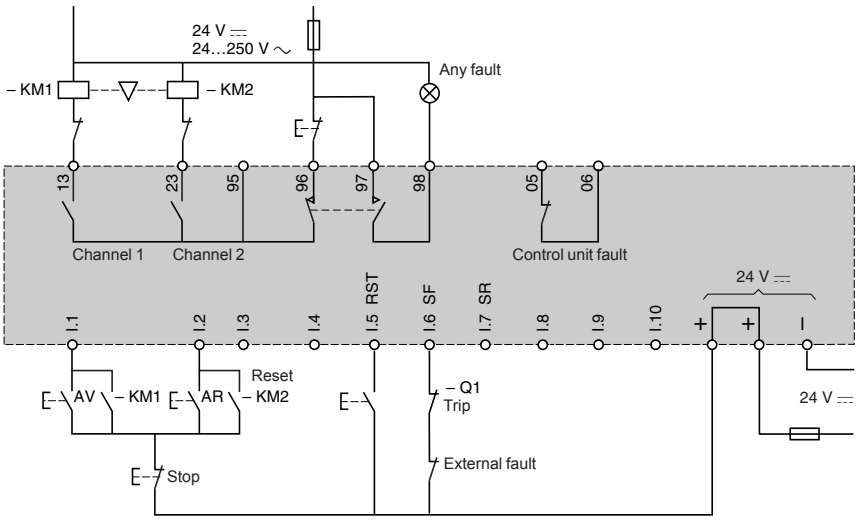

Control for Modbus communication module LUL C033

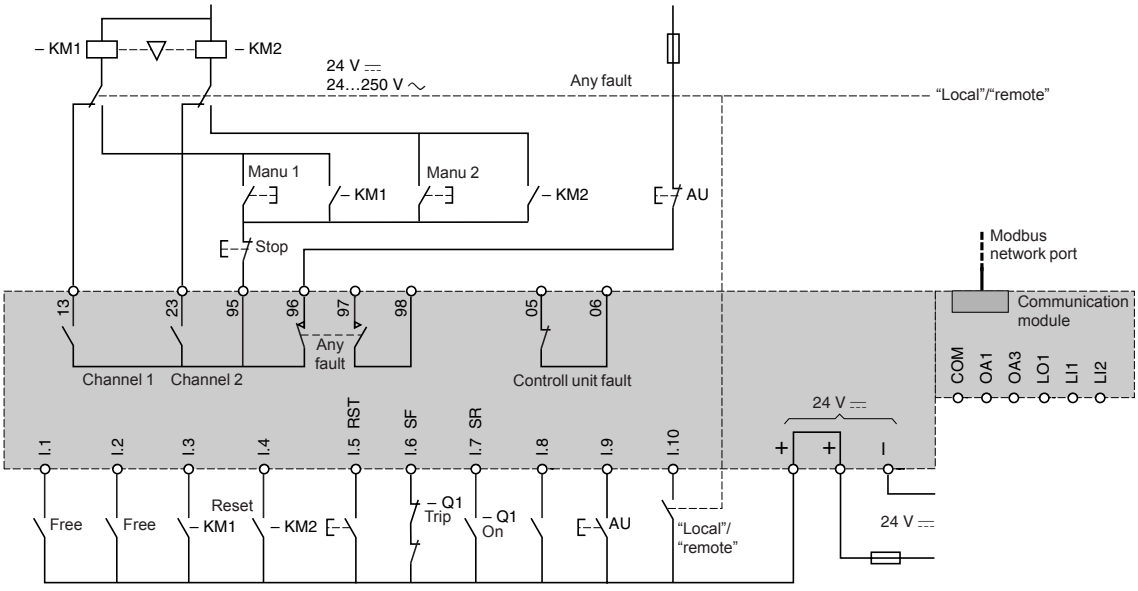

(1) The contacts are represented with controller powered up and not in a fault condition.

Product reference index

490 NAD 911 03 45
490 NAD 911 04 45

A
ABF H20 H100 27
ABF H20 H200 27
ABF H20 H300 27
AK5 JB144 16
AK5 PC13 16
AK5 PC33 16
AK5 PC33L 16
ASI LUFC5 28
ASI LUFC51 28
ASI TERV2 29
ATSU 01N206LT 78
ATSU 01N209LT 78
ATSU 01N212LT 78
ATSU 01N222LT 78
ATSU 01N232LT 78

G
GV1 G09 16
GV1 G10 16
GV2 G245 16
GV2 G254 16
GV2 G345 16
GV2 G445 16
GV2 G454 16
GV2 G554 16

L
LA9 LB920 16
LAD 90 16
LU2B 12●● 13
LU2B 32●● 13
LU2B A0●● 13
LU2B B0●● 13
LU2M B0●● 13
LU6M B0●● 13
LU9 AD7 31
LU9 AP00 17
LU9 AP11 17
LU9 AP12 17
LU9 AP20 17
LU9B N11C 27
LU9B C11 15
LU9B C20 15
LU9B N11 12
LU9B N11C 11, 29, 43
LU9B N11L 31, 35, 37 and 41
LU9 CD1 20, 29, 43 and 45
LU9 C1 15
LU9 C2 15
LU9 G02 27
LU9 GC3 43
LU9 GC7 31
LU9 M1 13
LU9M R1 13
LU9M R1C 13
LU9M RC 27, 29, 43
LU9M RL 31, 35, 37 and 41
LU9 R03 27
LU9 R10 27
LU9 R30 27
LU9 RAD705 31
LU9 RCD03 41
LU9 RCD10 41
LU9 RCD30 41
LU9 RCD50 41
LU9 RDD03 41
LU9 RDD10 41
LU9 RDD30 41
LU9 RFL15 41
LU9 RPB010 31
LU9 RPB100 31
LU9 RPB400 31
LU9 SP0 17
LUA1 C11 15
LUA1 C110 15
LUA1 C20 15
LUA1 C200 15
LUA8 E20 15
LUA LB1 16
LUA LF1 16
LUB 12 8, 12
LUB 120 12
LUB 32 12
LUB 320 11, 12
LUCA 05●● 19
LUCA 12●● 19
LUCA 18●● 19
LUCA 1X●● 19
LUCA 32●● 19
LUCA X6●● 19
LUCA 12FU 8, 10
LUCB T1BL 94
LUCB 05●● 19
LUCB 12FU 9
LUCB 12●● 19
LUCB 18●● 19
LUCB 1X●● 19
LUCB 32●● 19
LUCB X6●● 19
LUCC 05●● 19
LUCC 12●● 19
LUCC 18●● 19
LUCC 1X●● 19
LUCC 32●● 19
LUCC X6●● 19
LUCD T1BL 94
LUCD 05●● 19
LUCD 12●● 19
LUCD 18●● 19
LUCD 1X●● 19
LUCD 32●● 19
LUCD X6●● 19
LUCL05●● 84
LUCL12●● 84
LUCL18●● 84
LUCL1X●● 84
LUCL32●● 84
LUCL6X●● 84
LUCM 05BL 20
LUCM 12BL 20
LUCM 18BL 20
LUCM 1XBL 20
LUCM 32BL 20
LUCM T1BL 94
LUCM X6BL 20
LUCM 32BL 11
LUCM T1BL 90
LUF C00 26
LUF DA01 21
LUF DA10 21
LUF DH11 21
LUF N02 15
LUF N11 15
LUF N20 15
LUF P1 45
LUF P7 45
LUF P9 45
LUF V2 21
LUF W10 9, 21
LUL C031 43
LUL C033 11, 43, 90
LUL C07 31
LUL C08 35
LUL C09 37
LUL C15 41
LUT C0301 94
LUT C0501 94
LUT C1001 94
LUT C2001 94
LUT C4001 90, 94
LUT C8001 94
LUT M10BL 94
LUT M20BL 90, 94

N
NS 250HMA 90

S
STB XBE1100 41
STB XBE1300 41

T
TSX CDP 053 27
TSX CDP 103 27
TSX CDP 203 27
TSX CDP 301 27
TSX CDP 303 27
TSX CDP 501 27
TSX CDP 503 27
TSX FP ACC12 45
TSX CANCA100 35
TSX CANCA50 35
TSX CANCADD03 35
TSX CANCADD1 35
TSX CANCADD3 35
TSX CANCADD5 35
TSX CANCB100 35
TSX CANCB●● 35
TSX CANKCDF●● 35
TSX CANTD M4 35
TSX PBSCA100 31
TSX PBSCA400 31

V
VW3 A8 104 24
VW3 A8 105 24
VW3 A8 106 24
VW3 A8 114 24
VW3 A8 115 24
VW3 A8 306 D30 45
VW3 A8 306 R 43
VW3 A8 306 RC 43
VW3 A8 306 R03 43, 45
VW3 A8 306 R10 43, 45
VW3 A8 306 R30 43, 45
VW3 A8 306 TF03 43
VW3 A8 306 TF10 43
VW3 G4104 78

X
XBT NU400 20
XBT Z938 20
XGS Z24 24
XZ CG0142 29
XZ MC11 29
XZ MG12 29